CHELSEA®

Bulletin HY25-2230-M1/US

# Parts List
# 230/231 Series

Effective: January 15, 2009
Supersedes: HY25-2230-M1/US Dated July 2007

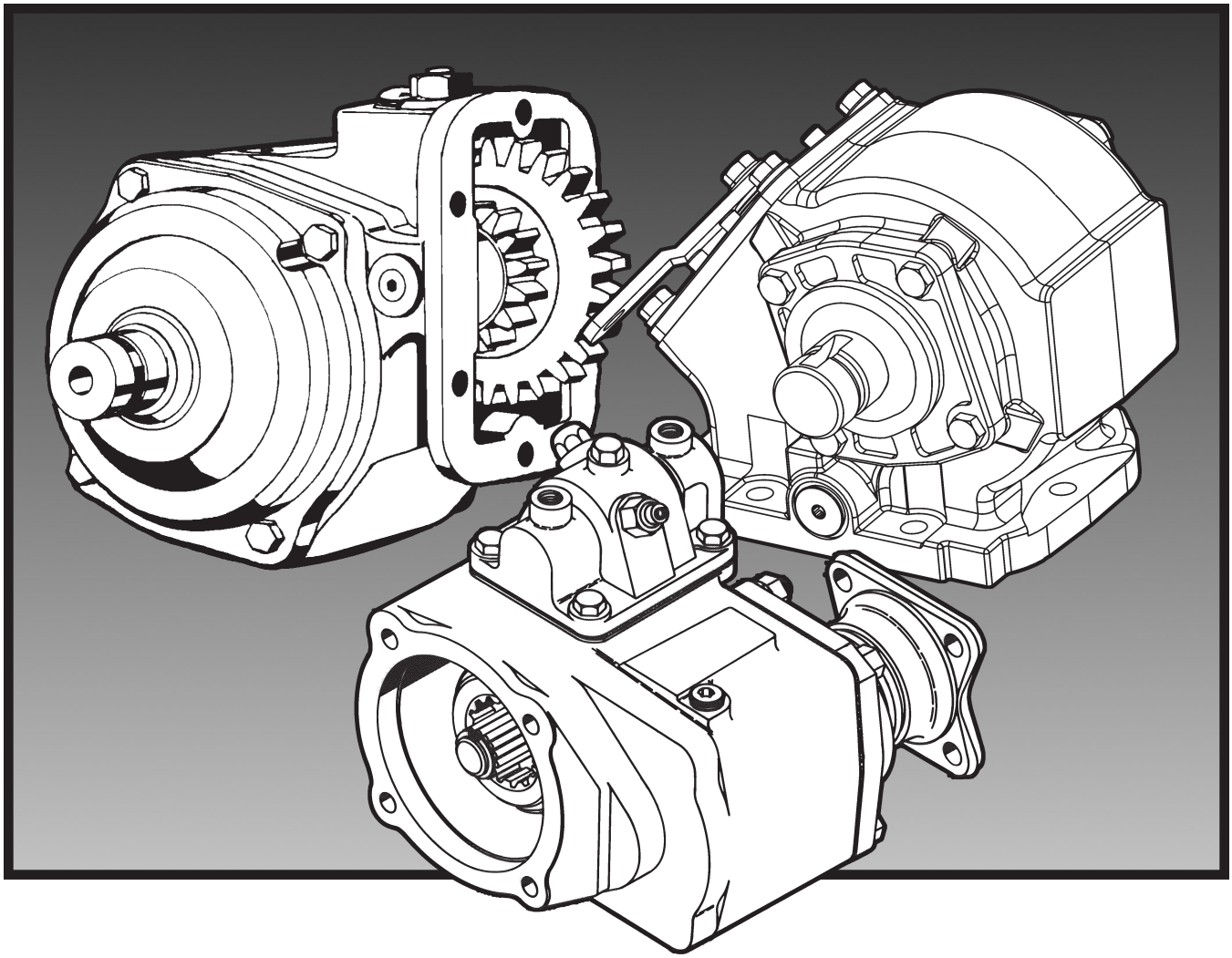

Parker

## WARNING

FAILURE OR IMPROPER SELECTION OR IMPROPER USE OF THE PRODUCTS AND/OR SYSTEMS DESCRIBED HEREIN OR RELATED ITEMS CAN CAUSE DEATH, PERSONAL INJURY AND PROPERTY DAMAGE.

This document and other information from Parker Hannifin Corporation, its subsidiaries and authorized distributors provide product and/or system options for further investigation by users having technical expertise. It is important that you analyze all aspects of your application and review the information concerning the product or system in the current product catalog. Due to the variety of operating conditions and applications for these products or systems, the user, through its own analysis and testing, is solely responsible for making the final selection of the products and systems and assuring that all performance, safety and warning requirements of the application are met.

The products described herein, including without limitation, product features, specifications, designs, availability and pricing, are subject to change by Parker Hannifin Corporation and its subsidiaries at any time without notice.

## Offer of Sale

The items described in this document are hereby offered for sale by Parker Hannifin Corporation, its subsidiaries or its authorized distributors. This offer and its acceptance are governed by the provisions stated in the "Offer of Sale".

© Copyright 2009, Parker Hannifin Corporation, All Rights Reserved



**Parker Hannifin Corporation**
Chelsea Products Division
Olive Branch, MS 38654 USA

## Contents

230 Exploded View ..... 1
230 Bill of Materials ..... 2-3
230 Assembly Arrangements ..... 3
230 Model Number Designation ..... 4
230 Case Dimensions ..... 4
231 Exploded View ..... 5
231 Bill of Materials ..... 6-7
231 Assembly Arrangements ..... 7
231 Model Number Designation ..... 8
231 Case Dimensions ..... 8
230/231 Gear Chart ..... 9
Shaft Brake (“BA” and “BD”) Bill of Material ..... 10
P.T.O. Combo Valve Installation Sketch (SK-429 Rev A) ..... 11
230/231 Air Shift Installation Sketch without E.O.C (Allison 1000, 2000/2400) ..... 12
230/231 Air Shift Installation Parts List without E.O.C. (Allison) ..... 13
230/231 Air Shift Installation Sketch with E.O.C (Allison 1000, 2000/2400) ..... 14-15
230/231 Air Shift Installation Parts List with E.O.C. (Allison) ..... 16-17
230/231 Air Shift Installation with Pilot Valve ..... 18
230/231 Pump Shafts and Flanges ..... 19
Pump Flange Conversion Kit Bill of Materials ..... 20-23
Offer of Sale ..... 24

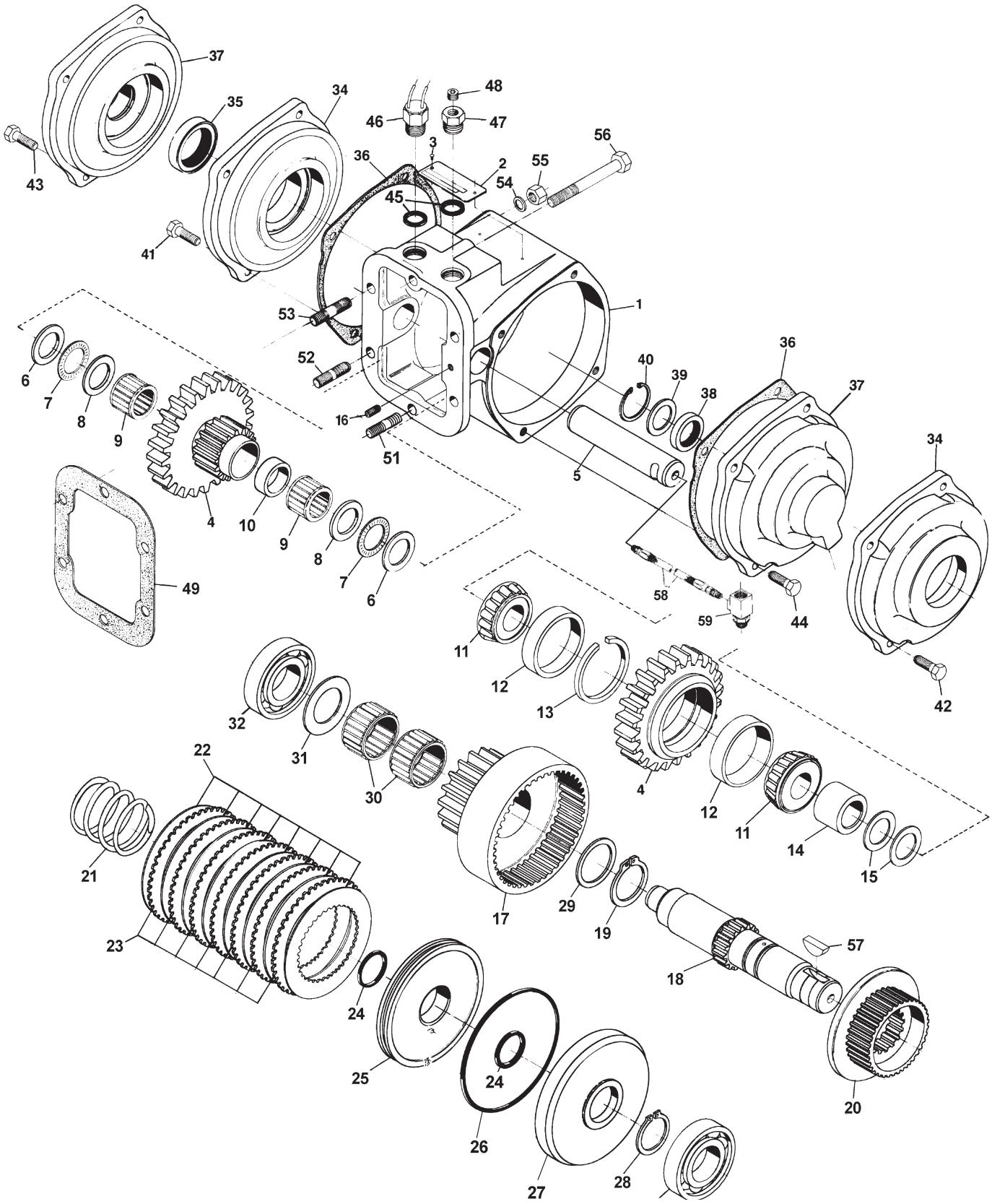




Parker Chelsea

**Parker Hannifin Corporation**
Chelsea Products Division
Olive Branch, MS 38654 USA

| Item | Part Number | Description | Quantity |
|---|---|---|---|
| 1 | **1-P-437** | Housing | 1 |
| 2 | **68-P-2** | Name Plate | 1 |
| 3 | **378422** | Drive Screw | 2 |
| 4 | See Chart Pg. 9 | Gear, Input | 1 |
| 5 | **9-P-55** | Idler Shaft (Standard No pressure Lube) | 1 or |
| | **9-P-54** | Idler Shaft (Pressure Lube) | |
| 6 | **31-P-61** | Thrust Washer (Idler Shaft .031") | 2 |
| 7 | **560920** | Needle Thrust Bearing (Idler Shaft) | 2 |
| 8 | **31-P-62** | Thrust Washer (Idler Shaft .125") | 2 |
| 9 | **550886** | Needle Bearing Assembly (Idler Shaft) | 2 |
| 10 | **14-P-54** | Spacer, Needle Bearing (Idler Shaft) | 1 |
| | | **(Items 11 thru 15 used in "U" Ratios Only)** | |
| 11 | **560968** | Bearing Cone | 2 |
| 12 | **550221** | Bearing Cup | 2 |
| 13 | **379313** | Lockring | 1 |
| 14 | **4-P-143** | Spacer, Input Gear | 1 |
| 15 | **14-P-65-1** | Bearing Adjusting Spacer (.054"-.056") | A.R. |
| | **14-P-65-2** | Bearing Adjusting Spacer (.059"-.061") | A.R. |
| | **14-P-65-3** | Bearing Adjusting Spacer (.064"-.066") | A.R. |
| | **14-P-65-4** | Bearing Adjusting Spacer (.069"-.071") | A.R. |
| | **14-P-65-5** | Bearing Adjusting Spacer (.074"-.076") | A.R. |
| 16 | **378452-7** | Set Screw (.250"-20 x .500") | 1 |
| 17 | See Chart Pg. 9 | Gear, Output | 1 |
| | See Chart Pg.19 | **Driveshaft and Clutch Assembly (Includes items 18 thru 28)** | 1 |
| | **328926-1X** | "XD" Output/Ass'y 4 & 6 (1.250" round) | |
| | **328926-2X** | "XD" Output/Ass'y 3 & 5 (1.250" round) | |
| 18 | **3-P-677** | Output Shaft ("XD" Ass'y 4) | 1 or |
| | **3-P-679** | Output Shaft ("XD" Ass'y 5) | 1 |
| 19 | **379746** | Snap Ring | 1 |
| 20 | **2-P-458** | Inner Clutch Gear | 1 |
| 21 | **37-P-39** | Clutch Spring | 1 |
| 22 | **379485** | Friction Disc | 8 |
| 23 | **379595** | Clutch Plate | 7 |
| 24 | **28-P-244** | O-Ring | 2 |
| 25 | **380057** | Piston | 1 |
| 26 | **28-P-178** | O-Ring | 1 |
| 27 | **379323** | Clutch Back-up Cylinder | 1 |
| 28 | **378576** | Snap Ring | 1 |
| 29 | **14-P-49** | Spacer | 1 |
| 30 | **560918** | Roller Bearing | 2 |
| 31 | **31-P-57** | Thrust Washer | 1 |
| 32 | **550010** | Ball Bearing | 2 |
| 34 | | **Bearing Cover, Open End** | 1 |
| | **21-P-451** | For 3 & 5 Assembly | |
| | **21-P-297** | For 4 & 6 Assembly | |
| 35 | **28-P-225** | Oil Seal, Output | 1 |
| | **28-P-230** | Oil Seal, Output ("XY") | 1 |
| 36 | **22-P-53** | Gasket, Bearing Cover | 2 |
| | | **Bearing Cover Assembly, Closed End** | 1 |
| | **328806-1X** | For 3 & 5 Assembly (Includes items 37 thru 40) | |
| | **328807-1X** | For 4 & 6 Assembly (Includes items 37 thru 40) | |
| 37 | | **Bearing Cover, Closed End** | 1 |
| | **21-P-295** | For 3 & 5 Assembly | |
| | **21-P-449** | For 4 & 6 Assembly | |
| 38 | **28-P-179** | Oil Seal | 1 |

A.R. — As Required

Continued on next page.



Parker Chelsea

**Parker Hannifin Corporation**
Chelsea Products Division
Olive Branch, MS 38654 USA

| Item | Part Number | Description | Quantity |
|---|---|---|---|
| 39 | **378811** | Back-up Plate | 1 |
| 40 | **378849** | Snap Ring | 1 |
| 41 | **378430-10** | Capscrew, Hex Head (.3125" - 18 x 1.000") (Ass'y 4 & 6, Standard Shaft) | 4 |
| 42 | **378430-12** | Capscrew, Hex Head (.3125" - 18 x 1.250") (Ass'y 3 & 5, Standard Shaft) | 4 |
| 43 | **378430-10** | Capscrew, Hex Head (.3125" - 18 x 1.000") (Closed Ass'y 3 & 5) | 4 |
| 44 | **378430-12** | Capscrew, Hex Head (.3125" - 18 x 1.250") (Closed Ass'y 4 & 6) | 4 |
| 45 | **28-P-171** | O-Ring | 2 |
| 46 | **379243** | Speed Sensor (Transducer) Included w/optional Overspeed Control | 1 or |
| | **379917** | Speed Sensor (Transducer) Included w/optional Overspeed Control (Allison 1000, 2000/2400) | 1 |
| 47 | **379242** | Adapter Plug | |
| | | With Speed Limiter | 1 |
| | | Without Speed Limiter | 2 |
| 48 | **379231** | Pipe Plug (.125" - 27 N.P.T.F.) | |
| | | With Speed Limiter | 1 |
| | | Without Speed Limiter | 2 |
| | | **LOOSE PARTS** | |
| 49 | **328950-6X** | Mounting Gasket and Installation Instructions | |
| | **35-P-9-1** | Mounting Gasket (.010") | 2 |
| | **35-P-9-2** | Mounting Gasket (.020") | 2 |
| N.S. | **7170-103X** | Mounting Parts Kit (Allison 1000, 2000/2400) | 1 or |
| | **328170-101X** | Mounting Parts Kit (Includes items 51 thru 56) | 1 |
| 51 | **379457-13** | Shoulder Stud (.375"-16, .375"-24 x 1.750") | 1 |
| 52 | **379423-16** | Stud (.375"-16, .375"-24 x 1.875") | 2 |
| 53 | **379423-14** | Stud (.375"-16, .375"-24 x 1.750") | 2 |
| 54 | **379224** | Tab Lockwasher (.438") | 1 |
| 55 | **379744** | Flange Nut (.375"-24) | 5 |
| 56 | **378935** | Capscrew, Hex Head (.375"-16 x 3.125") | 1 |
| 57 | **500007-29** | Woodruff Key | 1 |
| 58 | **328075X** | Pressure Lube Hose | 1 |
| 59 | | **For Item 59 see application pages for correct fittings** | |
| | **378840** | Street Tee, Allison AT Series and 1000 Series w/ #3 Bell Housing | 1 |
| | **378880** | Street Tee, Allison MT Series 1975 & After | 1 |
| | **378970** | Street Tee, Allison AT Series 1974 & Before and 1000/2000/2400 w/ #2 Bell Housing | 1 |
| | **378897** | Street Tee, Allison CLT, CLBT & HT Series | 1 |
| | | **SERVICE KITS** | |
| | **329043-1X** | Service Kit for Bearing, Seal, Gasket & Clutch Pack Replacement Kit | 1 |
| | **329043-2X** | Service for Bearing, Seal, Gasket & Clutch Pack with Piston and Backup Cylinder Sub Ass'y | 1 |
| | **329043-3X** | Service Kit for Seal, Gasket and Clutch pack w/Piston and Backup Cylinder | 1 |
| | **329043-11X** | Overhaul Kit, "BD" 3 & 5 Ass'y, Brake Section Only | 1 |
| | **329043-13X** | Gasket & Seal Kit, "BD" | 1 |
| | **329043-20X** | Overhaul Kit, "BA" 3 & 5 Ass'y | 1 |
| | **328356-55X** | Gasket & Seal Kit | 1 |

## Assembly Arrangements

N.S. — Not Shown

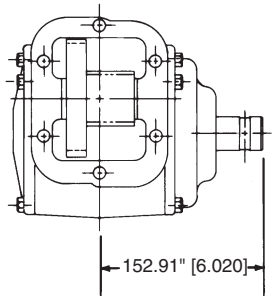


**3**

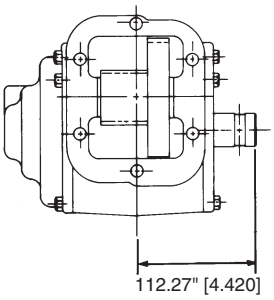


**4**

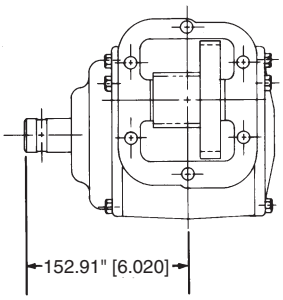


**5**

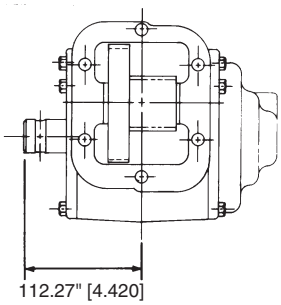


**6**



Parker Chelsea

**Parker Hannifin Corporation**
Chelsea Products Division
Olive Branch, MS 38654 USA

## 230 Model Number Designation

## 230/231 Series

**230 X K AK X – P 3 XD**

**BASIC MODEL**
230

**MOUNTING TYPE**
**G** = Allison 1000, 2000/2400
**X** = Standard Mounting

**GEAR RATIO**
**A** = 18/53
**B** = 15/34
**D** = 24/47
**K** = 29/42
**Q** = 34/37
**U** = No Ratio Gear

**INPUT GEAR DESIGNATOR**

**LUBRICATION**
**X** = No Lubrication
**P** = Pressure Lube

**OUTPUT TYPE**
**BA** = 1.250" Rd w/Shaft Brake (Automatic Trans.)*
**BD** = 1.250" Rd w/Shaft Brake (Manual Trans.)*
**XD** = 1.250" RD Std.Shaft
**XE** = S.A.E. "A" 2 Bolt*
**XK** = S.A.E. "B" 2 or 4 Bolt
**XP** = S.A.E. "A" 2 Bolt
**XR** = CHELSEA Special*
**XX** = 1.250" Tapered**
**XY** = Special Pump Mount*
**AF** = S.A.E. "BB" 2 or 4 Bolt
**RA** = Rotatable S.A.E. "B" 2 Bolt*
**RB** = Rotatable S.A.E. "B" 4 Bolt*
**RF** = Rotatable S.A.E. "B" 2 Bolt*

**ASSEMBLY ARRANGEMENT**
3, 4, 5, 6

**SHIFTER TYPE**
**A** = Air Shift
**P** = 12 Volt Electric/Air w/o E.O.C.
**Q** = 24 Volt Electric/Air w/o E.O.C.
**N** = 12 Volt Electric/Air w/E.O.C.
**J** = 24 Volt Electric/Air w/E.O.C.

* Only available in 3 & 5 assembly arrangements
** Uses Spicer® 3-1-604 Companion Flange

## Case Dimensions

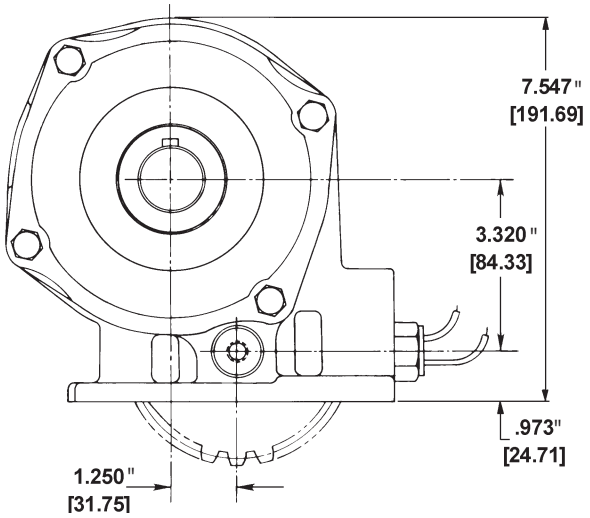




Parker Chelsea
**Parker Hannifin Corporation**
Chelsea Products Division
Olive Branch, MS 38654 USA

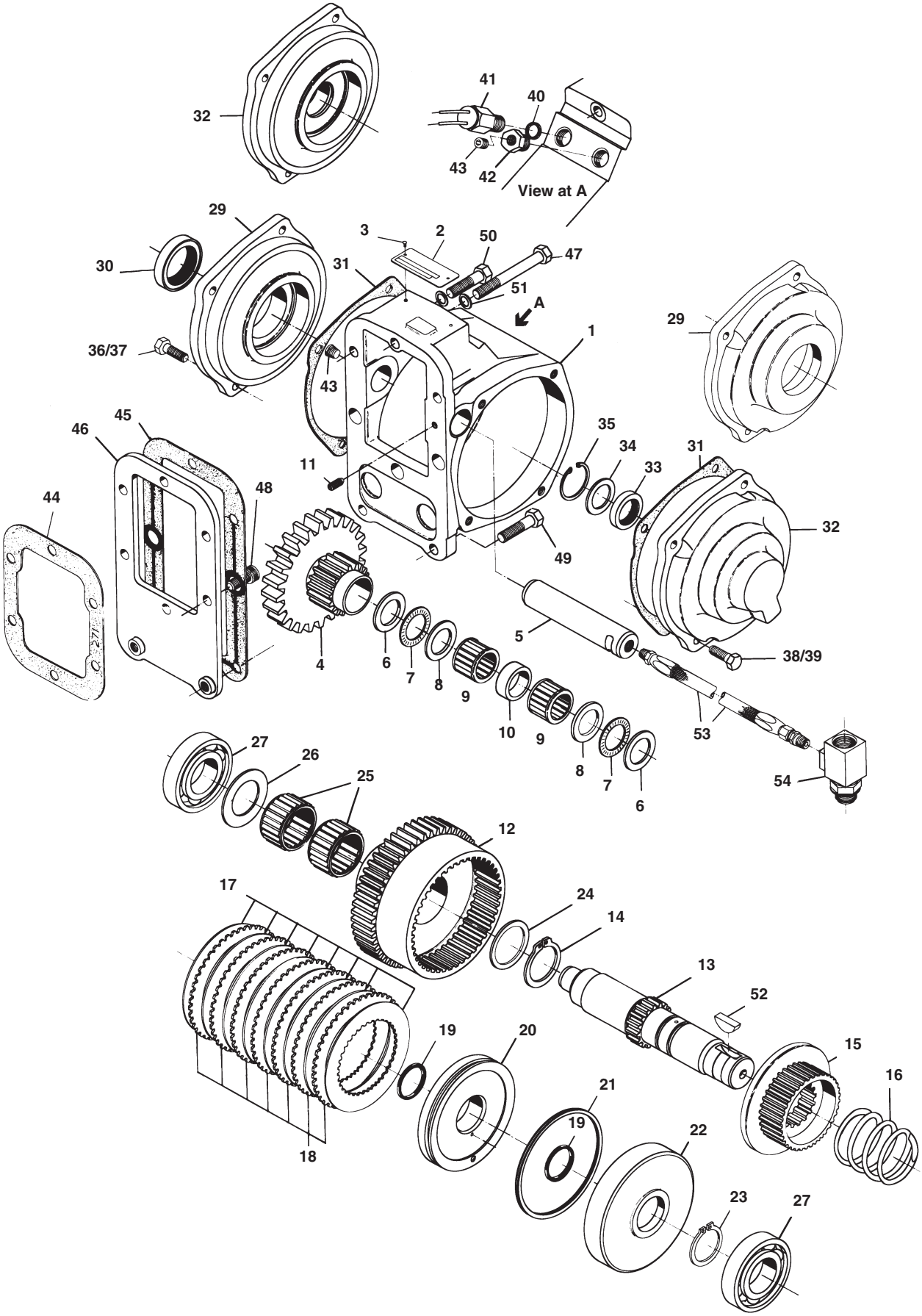




Parker Chelsea

**Parker Hannifin Corporation**
Chelsea Products Division
Olive Branch, MS 38654 USA

| Item | Part Number | Description | Quantity |
|---|---|---|---|
| 1 | **1-P-436** | Housing | 1 |
| 2 | **68-P-2** | Name Plate | 1 |
| 3 | **378422** | Drive Screw | 2 |
| 4 | See Chart Pg. 9 | Gear, Input | 1 |
| 5 | **9-P-55** | Idler Shaft (Standard No Pressure Lube) | 1 or |
| | **9-P-54** | Idler Shaft (Pressure Lube) | |
| 6 | **31-P-61** | Thrust Washer (Idler Shaft .031") | 2 |
| 7 | **560920** | Roller Bearing (Idler Shaft) | 2 |
| 8 | **31-P-62** | Thrust Washer (Idler Shaft .125") | 2 |
| 9 | **550886** | Needle Bearing Assembly (Idler Shaft) | 2 |
| 10 | **14-P-54** | Spacer, Needle Bearing (Idler Shaft) | 1 |
| 11 | **378452-4** | Set Screw (.250"- 20 x .312") | 1 |
| 12 | See Chart Pg. 9 | Gear, Output | 1 |
| | See Chart Pg. 19 | **Driveshaft and Clutch Assembly (Includes items 13 thru 23)** | 1 |
| | **328926-1X** | "XD" Output/Ass'y 4 & 6 (1.250" round) | |
| | **328926-2X** | "XD" Output/Ass'y 3 & 5 (1.250" round) | |
| 13 | **3-P-677** | Output Shaft ("XD" Ass'y 4) | 1 or |
| | **3-P-679** | Output Shaft ("XD" Ass'y 5) | 1 |
| 14 | **379746** | Snap Ring | 1 |
| 15 | **2-P-458** | Inner Clutch Gear | 1 |
| 16 | **37-P-39** | Clutch Spring | 1 |
| 17 | **379485** | Friction Disc | 8 |
| 18 | **379595** | Clutch Plate | 7 |
| 19 | **28-P-244** | O-Ring | 2 |
| 20 | **380057** | Piston | 1 |
| 21 | **28-P-178** | O-Ring | 1 |
| 22 | **379323** | Clutch Back-up Cylinder | 1 |
| 23 | **378576** | Snap Ring | 1 |
| 24 | **14-P-49** | Spacer, Needle Bearing | 1 |
| 25 | **560918** | Roller Bearing | 2 |
| 26 | **31-P-57** | Thrust Washer | 1 |
| 27 | **550010** | Ball Bearing | 2 |
| 29 | | **Bearing Cover, Open End** | 1 |
| | **21-P-451** | For 3 & 5 Assembly | |
| | **21-P-297** | For 4 & 6 Assembly | |
| 30 | **28-P-225** | Oil Seal, Output | 1 |
| | **28-P-230** | Oil Seal, Output ("XY") | 1 |
| 31 | **22-P-53** | Gasket, Bearing Cover | 2 |
| | | **Bearing Cover Assembly, Closed End** | 1 |
| | **328806-1X** | For 3 & 5 Assembly (Includes items 32 thru 35) | |
| | **328807-1X** | For 4 & 6 Assembly (Includes items 32 thru 35) | |
| 32 | | **Bearing Cover, Closed End** | 1 |
| | **21-P-295** | For 3 & 5 Assembly | |
| | **21-P-449** | For 4 & 6 Assembly | |
| 33 | **28-P-179** | Oil Seal | 1 |
| 34 | **378811** | Back-up Plate | 1 |
| 35 | **378849** | Snap Ring | 1 |
| 36 | **378430-10** | Capscrew, Hex Head (.312" - 18 x 1.000") (Ass'y 4 & 6, Standard Shaft) | 4 |
| 37 | **378430-12** | Capscrew, Hex Head (.312" - 18 x 1.250") (Ass'y 3 & 5, Standard Shaft) | 4 |
| 38 | **378430-10** | Capscrew, Hex Head (.312" - 18 x 1.000") (Closed Ass'y 3 & 5) | 4 |
| 39 | **378430-12** | Capscrew, Hex Head (.312" - 18 x 1.250") (Closed Ass'y 4 & 6) | 4 |
| 40 | **28-P-171** | O-Ring (Speed Senor) | 2 |
| 41 | **379243** | Speed Sensor (Transducer) Included w/optional Overspeed Control | 1 or |
| | **379917** | Speed Sensor (Transducer) Included w/optional Overspeed Control | 1 |

Continued on next page.

| Item | Part Number | Description | Quantity |
|---|---|---|---|
| | | (Allison 1000, 2000/2400) | |
| 42 | **379242** | O-Ring Boss Plug | |
| | | With Speed Limiter | 1 |
| | | Without Speed Limiter | 2 |
| 43 | **379231** | Pipe Plug (.125" - 27 N.P.T.F.) | |
| | | With Speed Limiter | 1 |
| | | Without Speed Limiter | 2 |
| | | **LOOSE PARTS** | |
| | **328948-5X** | **Mounting Gasket and Installation Instructions** | |
| 44 | **35-P-69** | Mounting Gasket | 1 |
| 45 | **35-P-84** | Mounting Gasket | 1 |
| N.S. | **N.S.S.** | Caution Label Kit | 1 |
| N.S. | **N.S.S.** | Owners Manual | 1 |
| | **329150X** | **Adapter Plate Assembly ( 6 Bolt )** | 1 |
| 46 | **26-P-56** | Adapter Plate | |
| N.S. | **379608** | Caution Tag | |
| N.S. | **378448-5** | Capscrew, Socket Head (.375" - 16 x .875") (Adapter Plate) | 3 |
| N.S. | **7171-104X** | Mounting Parts Kit ( Allison 1000, 2000/2400) | 1 or |
| | **7170-74X** | Mounting Parts Kit (Includes items 47 thru 51) | 1 |
| 47 | **378431-27** | Capscrew, Hex Head (.375"-16 x 3.250") | 1 |
| 48 | **379433-6** | Capscrew, Socket Head (.375"-16 x 1.000") | 3 |
| 49 | **378431-11** | Capscrew, Hex Head (.375"-16 x 1.125") | 2 |
| 50 | **379286-15** | Capscrew, Hex Head (.375"-16 x 1.625") | 2 |
| 51 | **378774** | Tab Lockwasher | 5 |
| 52 | **500007-29** | Woodruff Key | 1 |
| 53 | **328075X** | Pressure Lube Hose | 1 |
| 54 | | **For Item 54 see application pages for correct fittings** | |
| | **378840** | Street Tee, Allison AT Series and 1000 Series w/ #3 Bell Housing | 1 |
| | **378880** | Street Tee, Allison MT Series 1975 & After | 1 |
| | **378970** | Street Tee, Allison AT Series 1974 & Before and 1000/2000/2400 w/ #2 Bell Housing | 1 |
| | **378897** | Street Tee, Allison CLT, CLBT & HT Series | 1 |
| | **328748X** | Pump Mounting Kit (XR output only) | 1 |
| | | **SERVICE KITS** | |
| | **329043-1X** | Service Kit for Bearing, Seal, Gasket & Clutch Pack Replacement Kit | 1 |
| | **329043-2X** | Service for Bearing, Seal, Gasket & Clutch Pack with Piston and Backup Cylinder Sub Ass'y | 1 |
| | **329043-3X** | Service Kit for Seal, Gasket and Clutch pack w/ Piston and Backup Cylinder | 1 |
| | **329043-11X** | Overhaul Kit, "BD" 3 & 5 Ass'y, Brake Section Only | 1 |
| | **329043-13X** | Gasket & Seal Kit, "BD" | 1 |
| | **329043-20X** | Overhaul Kit, "BA" 3 & 5 Ass'y | 1 |
| | **328356-56X** | Gasket & Seal Kit | 1 |

N.S. — Not Shown

## Assembly Arrangements

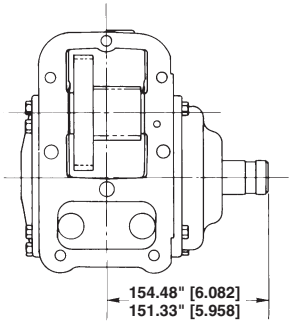


**3**

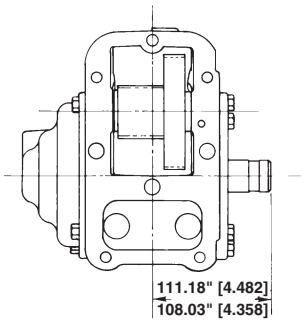


**4**

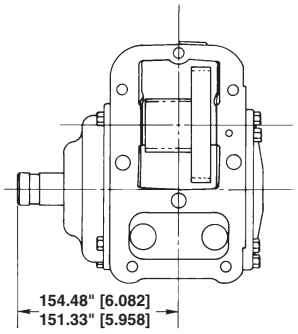


**5**

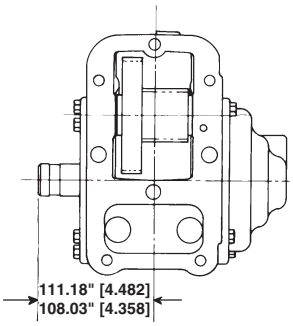


**6**



Parker Chelsea

**Parker Hannifin Corporation**
Chelsea Products Division
Olive Branch, MS 38654 USA

## 231 Model Number Designation

## 230/231 Series

**231 X K AK X – P 3 XD**

**BASIC MODEL**
231

**MOUNTING TYPE**
**G** = Allison 1000, 2000/2400
**M** = 6 Bolt Adaptor Plate

**GEAR RATIO**
**A** = 18/53
**B** = 15/34
**D** = 24/47
**K** = 29/42
**Q** = 34/37

**INPUT GEAR DESIGNATOR**

**LUBRICATION**
**X** = No Lubrication
**P** = Pressure Lube

**OUTPUT TYPE**
**BA** = 1.250" Rd w/Shaft Brake (Automatic Trans.)*
**BD** = 1.250" Rd w/ shaft brake (Manual Trans.)*
**XD** = 1.250" RD Std.Shaft
**XE** = S.A.E. "A" 2 Bolt*
**XK** = S.A.E. "B" 2 or 4 Bolt
**XP** = S.A.E. "A" 2 Bolt
**XR** = CHELSEA Special*
**XX** = 1.250" Tapered**
**XY** = Special Pump Mount*
**AF** = S.A.E. "BB" 2 or 4 Bolt
**RA** = Rotatable S.A.E. "B" 2 Bolt*
**RB** = Rotatable S.A.E. "B" 4 Bolt*
**RF** = Rotatable S.A.E. "B" 2 Bolt*

**ASSEMBLY ARRANGEMENT**
3, 4, 5, 6

**SHIFTER TYPE**
**A** = Air Shift
**P** = 12 Volt Electric/Air w/o E.O.C.
**Q** = 24 Volt Electric/Air w/o E.O.C.
**N** = 12 Volt Electric/Air w/E.O.C.
**J** = 24 Volt Electric/Air w/E.O.C.

* Only available in 3 & 5 assembly arrangements
** Uses Spicer® 3-1-604 Companion Flange

## Case Dimensions

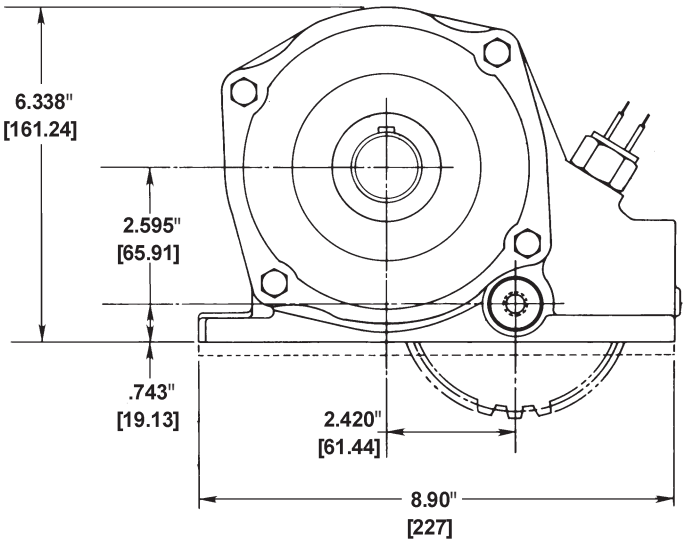




Parker Chelsea
**Parker Hannifin Corporation**
Chelsea Products Division
Olive Branch, MS 38654 USA

## Gear Chart

| Input Gear Item 4 | | | | | Output Gear Item 17 | |
|---|---|---|---|---|---|---|
| **Model Number** | **Input Gear Part Number** | **No. Teeth Lg. Cluster** | **No. Teeth Sm. Cluster** | **Gear Type** | **Output Gear Part Number** | **No. Teeth** |
| 230*AAH | 5-P-546 | 25 | 18 | Spur | 2-P-473 | 53 |
| 230*AAJ | 5-P-567 | 25 | 18 | Spur | 2-P-473 | 53 |
| 230*AAK | 5-P-548 | 25 | 18 | Spur | 2-P-473 | 53 |
| 230*AHV | 5-P-1295 | 27 | 18 | Spur | 2-P-473 | 53 |
| 230*ADA | 5-P-1370 | 27 | 18 | Spur | 2-P-473 | 53 |
| 230*BAH | 5-P-547 | 25 | 15 | Spur | 2-P-481 | 34 |
| 230*BAJ | 5-P-568 | 25 | 15 | Spur | 2-P-481 | 34 |
| 230*BHV | 5-P-1296 | 27 | 15 | Spur | 2-P-481 | 34 |
| 230*BDA | 5-P-1371 | 27 | 15 | Spur | 2-P-481 | 34 |
| 230*DAJ | 5-P-695 | 25 | 24 | Spur | 2-P-606 | 47 |
| 230*DAK | 5-P-807 | 25 | 24 | Spur | 2-P-606 | 47 |
| 230*DHV | 5-P-1297 | 27 | 20 | Spur | 2-P-606 | 47 |
| 230*DDA | 5-P-1372 | 27 | 24 | Spur | 2-P-606 | 47 |
| 230*KAJ | 5-P-769 | 25 | 29 | Spur | 2-P-638 | 42 |
| 230*KDA | 5-P-843 | 27 | 29 | Spur | 2-P-638 | 42 |
| 230*QAJ | 5-P-770 | 25 | 34 | Spur | 2-P-639 | 37 |
| 230*QDA | 5-P-844 | 27 | 34 | Spur | 2-P-639 | 37 |
| 230*UAJ | 5-P-1144 | 25 | | Spur | 2-P-640 | 17 |
| 230*UDB | 5-P-995 | 43 | | Spur | 2-P-748 | 29 |
| 231*AAH | 5-P-546 | 25 | 18 | Spur | 2-P-473 | 53 |
| 231*AAJ | 5-P-567 | 25 | 18 | Spur | 2-P-473 | 53 |
| 231*AAK | 5-P-548 | 25 | 18 | Spur | 2-P-473 | 53 |
| 231*AHV | 5-P-1295 | 27 | 18 | Spur | 2-P-473 | 53 |
| 231*BAH | 5-P-547 | 25 | 15 | Spur | 2-P-481 | 34 |
| 231*BAJ | 5-P-568 | 25 | 15 | Spur | 2-P-481 | 34 |
| 231*BHV | 5-P-1296 | 27 | 15 | Spur | 2-P-481 | 34 |
| 231*DAJ | 5-P-695 | 25 | 24 | Spur | 2-P-606 | 47 |
| 231*DAK | 5-P-807 | 25 | 24 | Spur | 2-P-606 | 47 |
| 231*DHV | 5-P-1297 | 27 | 24 | Spur | 2-P-606 | 47 |
| 231*KAK | 5-P-881 | 25 | 29 | Spur | 2-P-638 | 42 |
| 231*KAJ | 5-P-769 | 25 | 29 | Spur | 2-P-638 | 42 |
| 231*QAJ | 5-P-770 | 25 | 34 | Spur | 2-P-639 | 37 |

## Shaft Brake (“BA” & “BD”) Bill of Material

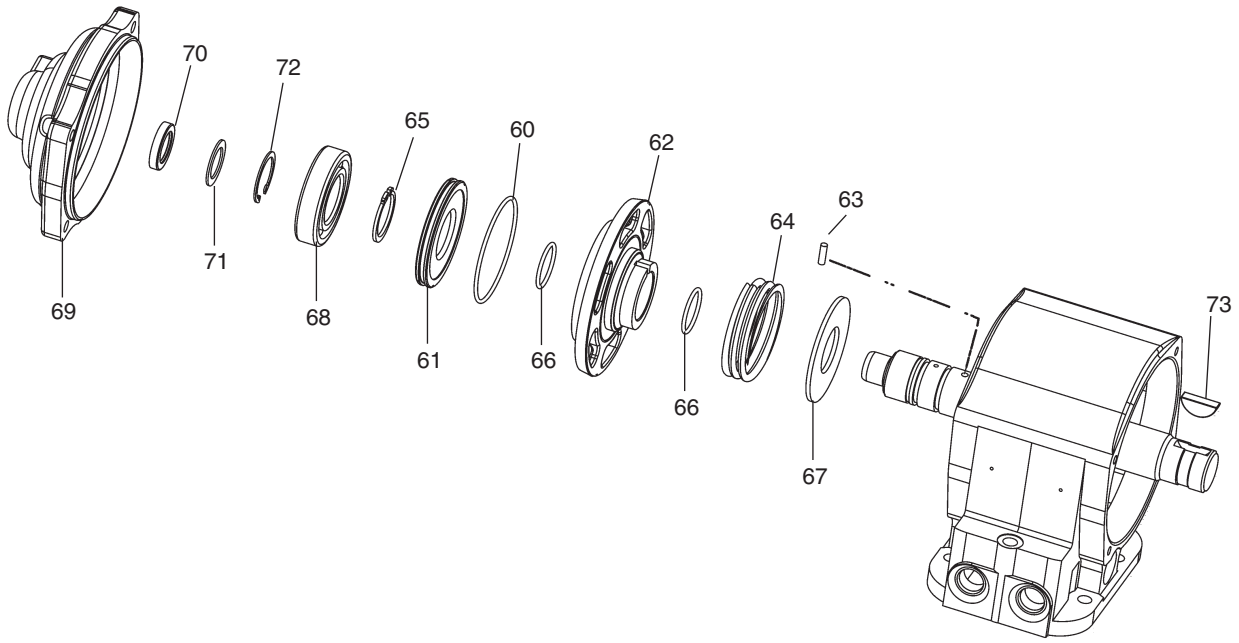


| Item | Part Number | Description | Quantity |
|---|---|---|---|
| | **329410X** | Brake Assembly (“BA” or “BD” Output) | 1 |
| 60 | **28-P-252** | O-Ring | 1 |
| 61 | **66-P-49** | Piston | 1 |
| 62 | **379976** | Brake Disk | 1 |
| 63 | **379977** | Pin (.187" x .625"), (“BA” & “BD” Output) | 1 |
| 64 | **37-P-24** | Spring, Manual Transmissions (“BD” Output) | 1 or |
| | **37-P-60** | Spring, Automatic Transmissions (“BA” Output) | |
| 65 | **378576** | Retaining Ring, (“BA” & “BD” Output) | 1 |
| 66 | **28-P-244** | O-Ring, (“BA” & “BD” Output) | 2 |
| 67 | **31-P-113** | Thrust Washer (“BA” & “BD” Output Shaft) | 1 |
| 68 | **550010** | Ball Bearing | 1 |
| | **328807-3X** | Bearing Cap Sub Assembly (Closed End 3 & 5, “BA” & “BD”) | |
| 69 | **21-P-670** | Bearing Cap | 1 |
| 70 | **28-P-179** | Oil Seal | 1 |
| 71 | **378811** | Back-up Plate | 1 |
| 72 | **278849** | Retainer Ring | 1 |
| 73 | **500007-29** | Woodruff Key (“XD”, “BA” & “BD” Outputs Only) | 1 |



Parker Chelsea
**Parker Hannifin Corporation**
Chelsea Products Division
Olive Branch, MS 38654 USA

## P.T.O./Combo Valve Installation Sketch, 230/231 Series (SK-429 Rev A)

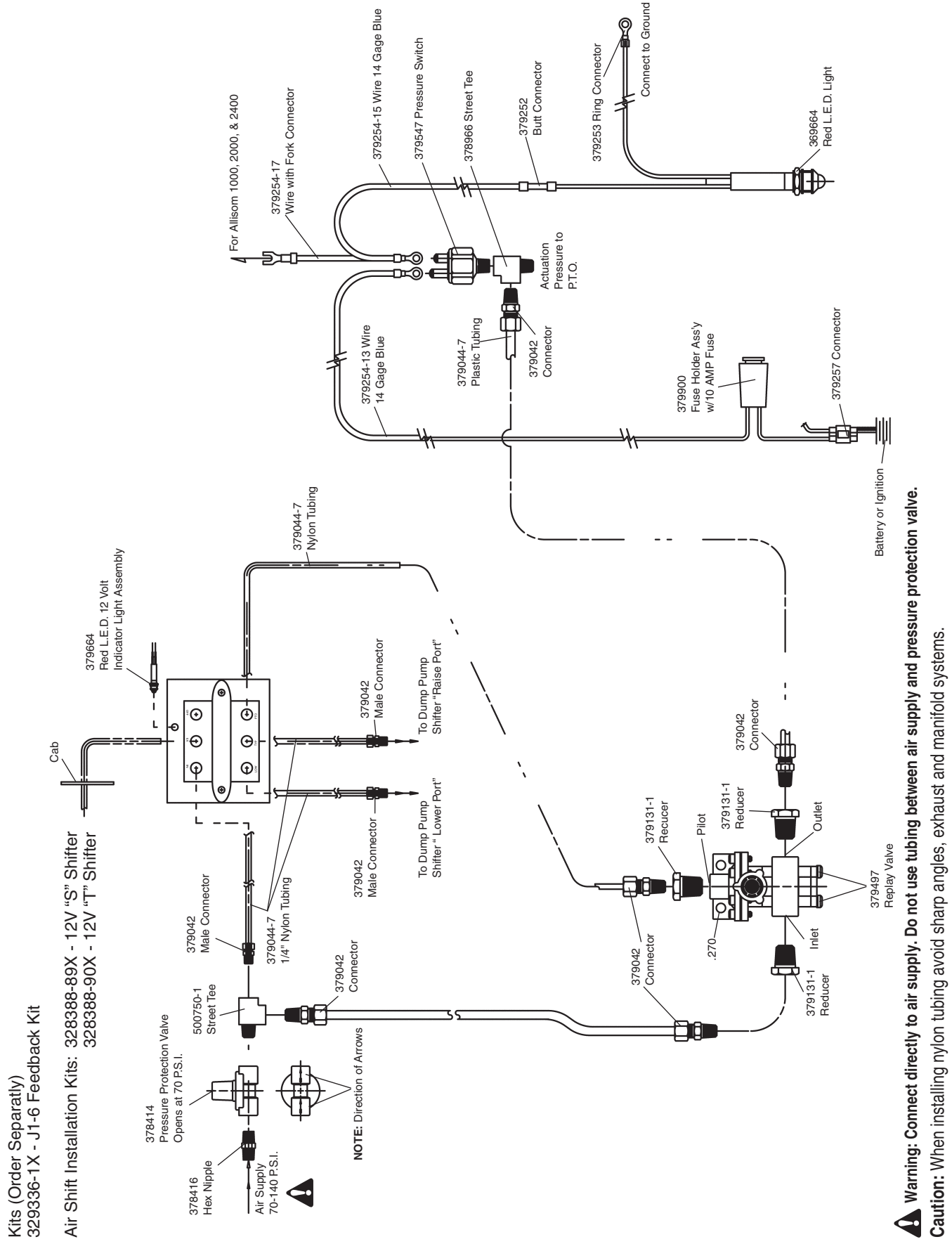




Parker Chelsea

**Parker Hannifin Corporation**
Chelsea Products Division
Olive Branch, MS 38654 USA

## Air Shift Installation Sketch without E.O.C. (Allison 1000, 2000/2400)

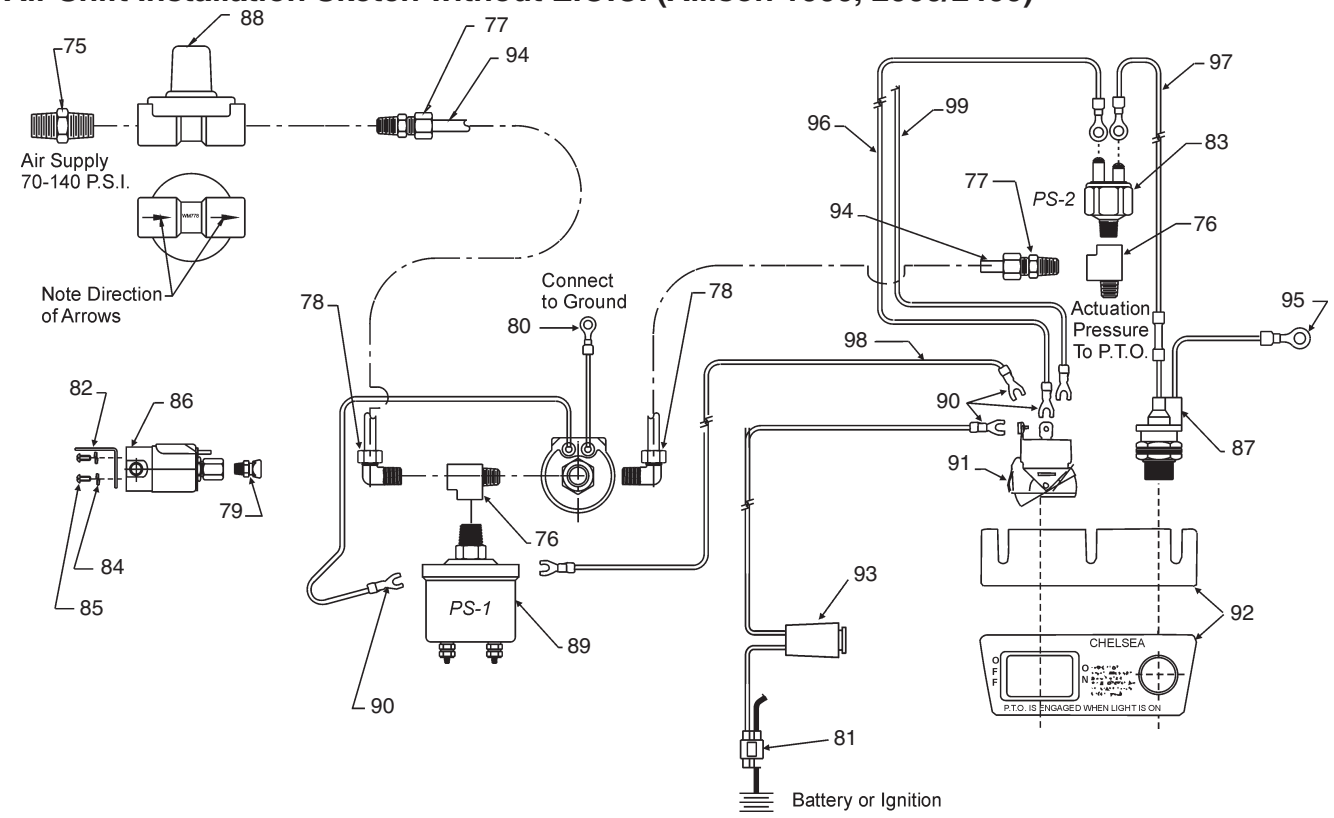


| Item | Part Number | Description | Quantity |
|---|---|---|---|
| | **328388-50X** | **12 Volt Air Shift Installation Kit without E.O.C. (Includes items 71 thru 94)** | 1 or |
| | **328388-51X** | **24 Volt Air Shift Installation Kit without E.O.C. (Includes items 71 thru 94)** | 1 |
| | **328388-49X** | **Air Shift Installation Kit (includes items 71 thru 81)** | 1 |
| 75 | **378416** | Hex Nipple | 1 |
| 76 | **378966** | Street Tee | 2 |
| 77 | **379042** | Male Connector | 2 |
| 78 | **379043** | Male Elbow | 2 |
| 79 | **379106** | Breather Atmospheric (.125" - 27 NP) | 1 |
| 80 | **379253** | Ring Connector | 1 |
| 81 | **379257** | Splice Connector | 1 |
| 82 | **379258** | Mounting Bracket, Solenoid | 1 |
| 83 | **379547** | Pressure Switch | 1 |
| 84 | **500357-7** | Lockwasher | 2 |
| 85 | **500457-6** | Mounting Screw | 2 |
| 86 | **379303-1** | Solenoid Valve (12 volt) | 1 or |
| | **379303-2** | Solenoid Valve (24 volt) | 1 |
| 87 | **378978** | Indicator Light (12 volt) | 1 or |
| | **379005** | Indicator Light (24 volt) | 1 |
| 88 | **378414** | Pressure Protection Valve | 1 |
| 89 | **379305** | Pressure Switch | 1 |
| 90 | **379306** | Fork Connector | 4 |
| 91 | **378881** | Rocker Switch | 1 |
| 92 | **379336** | Bracket | 1 |
| 93 | **379900** | Fuse Holder (10 amp.) | 1 |
| 94 | **379044-7** | Nylon Tubing (35 ft.) | 1 |
| 95 | **379253** | Ring Connector | 1 |
| 96 | **379254-13** | #14 Gauge Blue Wire w/ Ring Connector | 1 |
| 97 | **379254-15** | #14 Gauge Blue Wire w/ Ring and Butt Connector | 1 |
| 98 | **379254-8** | #14 Gauge Green Wire w/ Fork Connector | 1 |
| | **329336-1X** | Allison 1000, 2000/2400 Series Wire Kit | 1 |
| 99 | **379254-17** | Wire w/ Fork Connector (Allison 1000, 2000/2400 Series) | 1 |

## Air Shift Installation Sketch without E.O.C. (Allison)

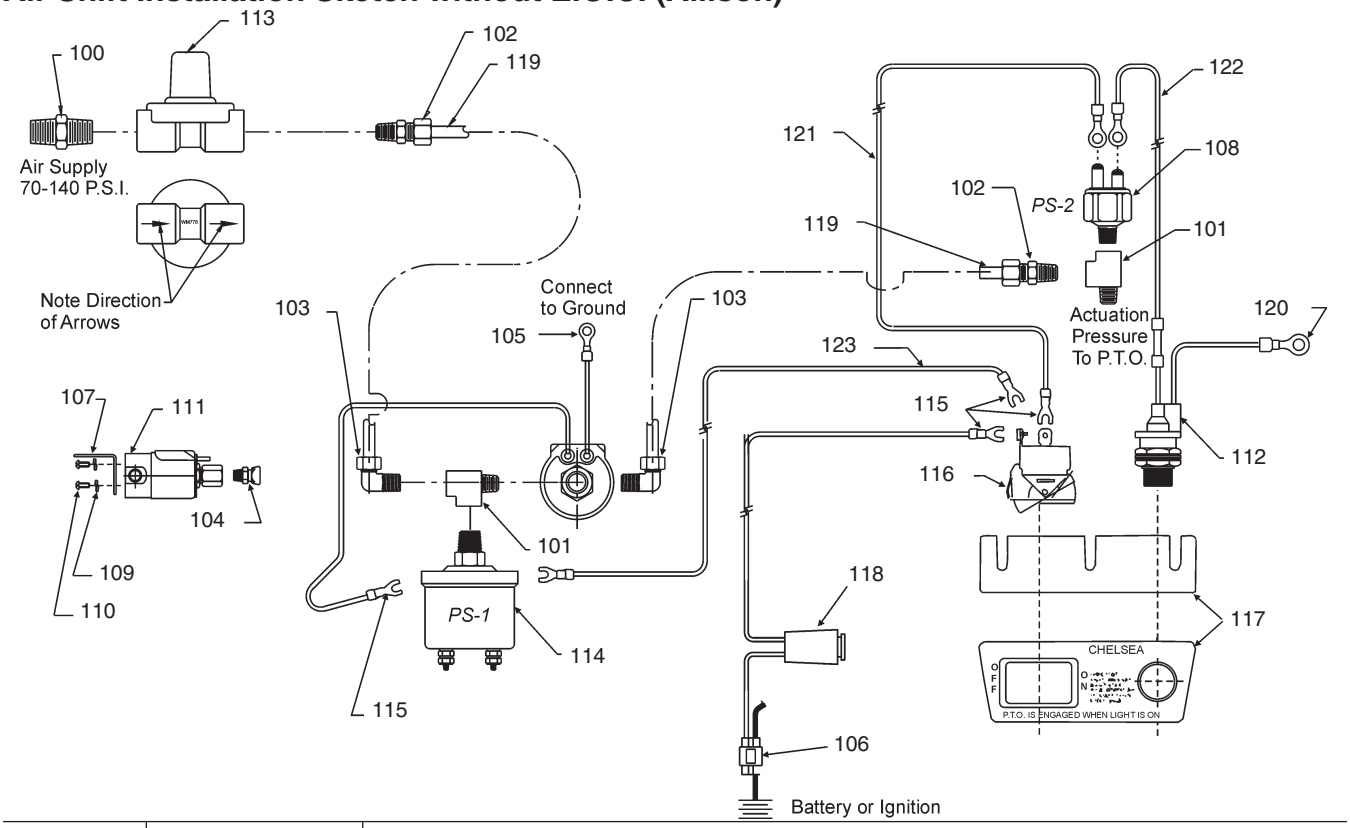


| Item | Part Number | Description | Quantity |
|---|---|---|---|
| | **328388-50X** | **12 Volt Air Shift Installation Kit without E.O.C. (Includes items 96 thru 119)** | 1 or |
| | **328388-51X** | **24 Volt Air Shift Installation Kit without E.O.C. (Includes items 96 thru 119)** | 1 |
| | **328388-49X** | **Air Shift Installation Kit (includes items 96 thru 106)** | 1 |
| 100 | **378416** | Hex Nipple | 1 |
| 101 | **378966** | Street Tee | 2 |
| 102 | **379042** | Male Connector | 2 |
| 103 | **379043** | Male Elbow | 2 |
| 104 | **379106** | Breather Atmospheric (.125" - 27 NPT) | 1 |
| 105 | **379253** | Ring Connector | 1 |
| 106 | **379257** | Splice Connector | 1 |
| 107 | **379258** | Mounting Bracket, Solenoid | 1 |
| 108 | **379547** | Pressure Switch | 1 |
| 109 | **500357-7** | Lockwasher | 2 |
| 110 | **500457-6** | Mounting Screw | 2 |
| 111 | **379303-1** | Solenoid Valve (12 volt) | 1 or |
| | **379303-2** | Solenoid Valve (24 volt) | 1 |
| 112 | **378978** | Indicator Light (12 volt) | 1 or |
| | **379005** | Indicator Light (24 volt) | 1 |
| 113 | **378414** | Pressure Protection Valve | 1 |
| 114 | **379305** | Pressure Switch | 1 |
| 115 | **379306** | Fork Connector | 4 |
| 116 | **378881** | Rocker Switch | 1 |
| 117 | **379336** | Bracket | 1 |
| 118 | **379900** | Fuse Holder (10 amp.) | 1 |
| 119 | **379044-7** | Nylon Tubing (35 ft.) | 1 |
| 120 | **379253** | Ring Connector | 1 |
| 121 | **379254-13** | #14 Gauge Blue Wire w/ Ring Connector | 1 |
| 122 | **379254-15** | #14 Gauge Blue Wire w/ Ring and Butt Connector | 1 |
| 123 | **379254-8** | #14 Gauge Green Wire w/ Fork Connector | 1 |

## Air Shift Installation Sketch with E.O.C. (Allison 1000, 2000/2400)

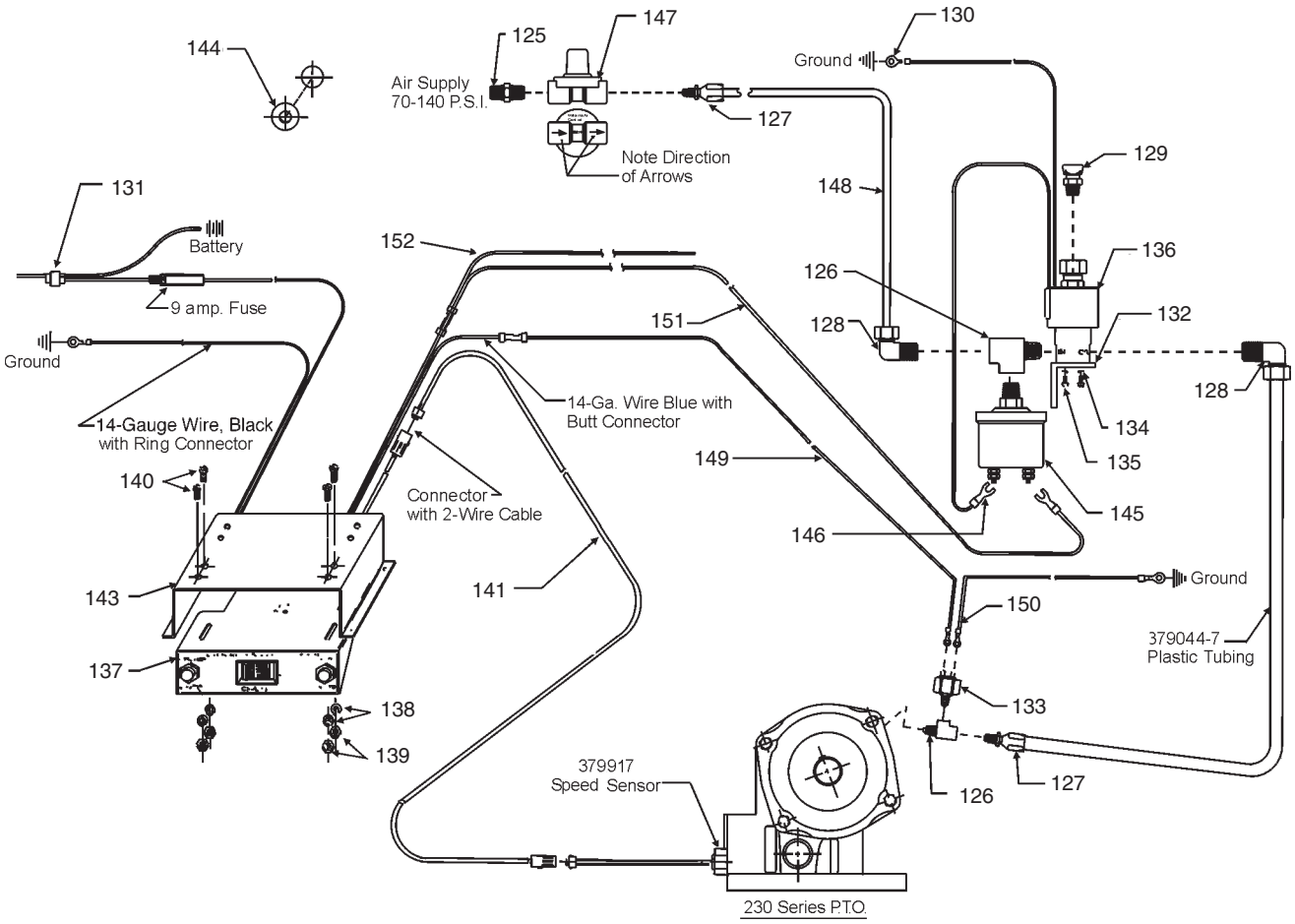


| Item | Part Number | Description | Quantity |
|---|---|---|---|
| | **328388-52X** | **12 Volt Air Shift Installation Kit (Includes items 120 thru 148)** | 1 or |
| | **328388-53X** | **24 Volt Air Shift Installation Kit (Includes items 120 thru 148)** | 1 |
| | **328388-49X** | **Air Shift Installation Kit (includes items 120 thru 130)** | 1 |
| 125 | **378416** | Hex Nipple | 1 |
| 126 | **378966** | Street Tee | 2 |
| 127 | **379042** | Male Connector | 2 |
| 128 | **379043** | Male Elbow | 2 |
| 129 | **379106** | Breather Atmospheric (1/8" - 27 NPT) | 1 |
| 130 | **379253** | Ring Connector | 1 |
| 131 | **379257** | Splice Connector | 1 |
| 132 | **379258** | Mounting Bracket Solenoid | 1 |
| 133 | **379547** | Pressure Switch | 1 |
| 134 | **500357-7** | Lockwasher | 2 |
| 135 | **500457-6** | Mounting Screw | 2 |
| 136 | **379303-1** | Solenoid Valve (12 volt) | 1 or |
| | **379303-2** | Solenoid Valve (24 volt) | 1 |
| | **328924-12X** | 12 Volt Speed Limiter w/ E.O.C. | 1 or |
| | **328924-24X** | 24 Volt Speed Limiter w/ E.O.C. | 1 |
| 137 | **328922-12X** | Speed Limiter Control Box (12 volt) | 1 or |
| | **328922-24X** | Speed Limiter Control Box (24 volt) | 1 |

Continued on next page



Parker Chelsea

**Parker Hannifin Corporation**
Chelsea Products Division
Olive Branch, MS 38654 USA

| Item | Part Number | Description | Quantity |
|---|---|---|---|
| | **328931X** | Parts Bag, Mounting | 1 |
| 138 | **500357-7** | Lockwasher | 4 |
| 139 | **500376-6** | Hex Nut | 4 |
| 140 | **500448-9** | Slotted Screw | 4 |
| 141 | **328923-10X** | Speed Switch Connector Cable (10 Ft.) | 1 or |
| | **328923-5X** | Speed Switch Connector Cable (5 Ft.) Optional | 1 |
| 143 | **379244** | Universal Mounting Bracket | 1 |
| N.S. | **379260** | Caution Tag 12 Volt | 1 or |
| N.S. | **379261** | Caution Tag 24 Volt | 1 |
| N.S. | **379266** | E.O.C. Owners Manual 230/231 Series | 1 |
| N.S. | **379318** | E.O.C. Screwdriver | 1 |
| N.S. | **68-P-33-1** | Spanish Control Plate | 1 |
| N.S. | **68-P-33-2** | French Control Plate | 1 |
| 144 | **379265** | Grommet | 1 |
| 145 | **379305** | Pressure Switch | 1 |
| 146 | **379306** | Fork Connector | 4 |
| 147 | **378414** | Pressure Protection Valve | 1 |
| 148 | **379044-7** | Nylon Tubing (35 ft.) | 1 |
| 149 | **379254-13** | #14 Gauge Blue Wire w/ Ring Connector | 1 |
| 150 | **379254-14** | #14 Gauge Black Wire w/ 2 Ring Connectors | 1 |
| 151 | **379254-8** | #14 Gauge Green Wire w/ Fork Connector | 1 |
| | **329336-2X** | Allison 1000, 2000/2400 Series Wire Kit | 1 |
| 152 | **379254-18** | Wire (Allison 1000, 2000/2400 Series) | 1 |

N.S. — Not Shown

## Air Shift Installation Sketch with E.O.C. (Allison)

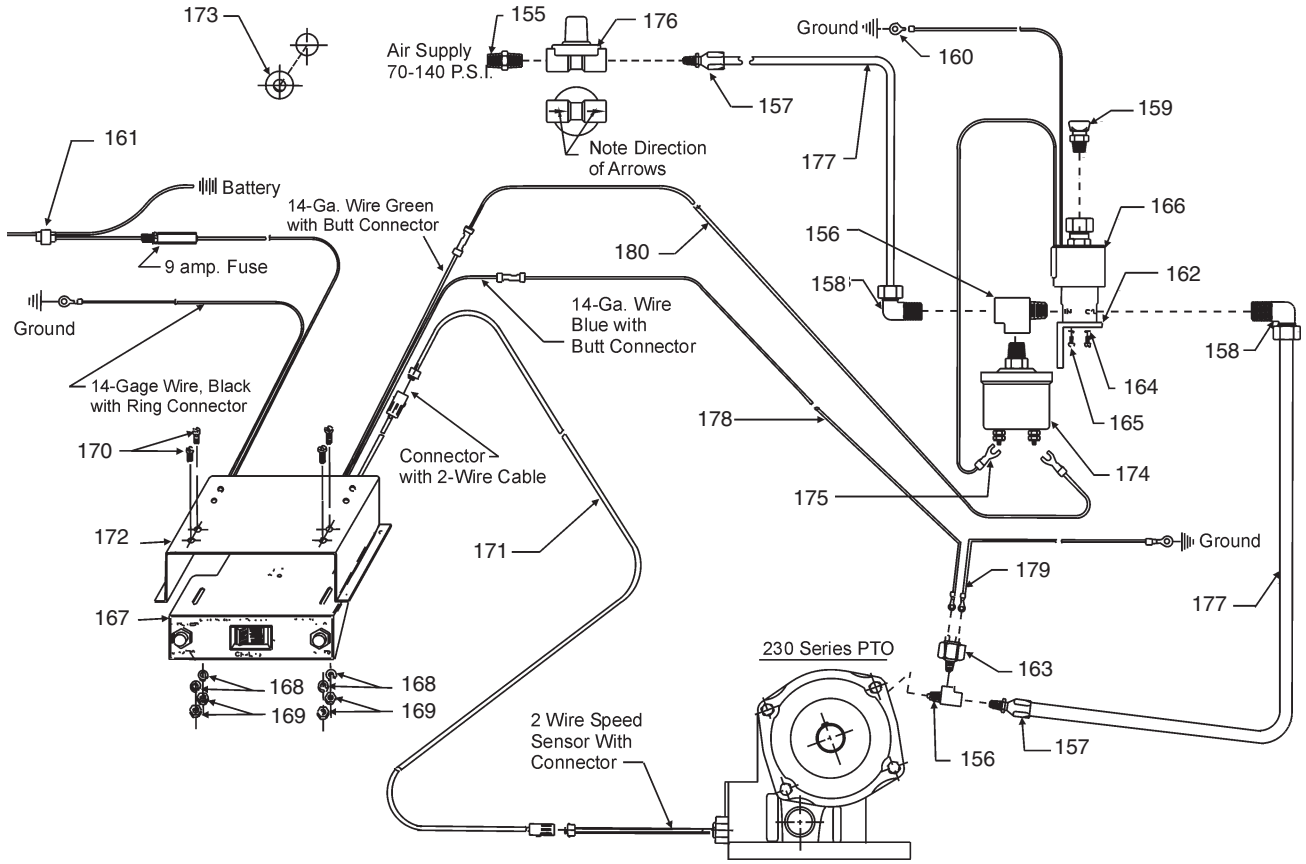


| Item | Part Number | Description | Quantity |
|---|---|---|---|
| | **328388-52X** | **12 Volt Air Shift Installation Kit (Includes items 137 thru 163)** | 1 or |
| | **328388-53X** | **24 Volt Air Shift Installation Kit (Includes items 137 thru 163)** | 1 |
| | **328388-49X** | Air Shift Installation Kit (includes items 137 thru 147) | 1 |
| 155 | **378416** | Hex Nipple | 1 |
| 156 | **378966** | Street Tee | 2 |
| 157 | **379042** | Male Connector | 2 |
| 158 | **379043** | Male Elbow | 2 |
| 159 | **379106** | Breather Atmospheric 1/8" - 27 NPT | 1 |
| 160 | **379253** | Ring Connector | 1 |
| 161 | **379257** | Splice Connector | 1 |
| 162 | **379258** | Mounting Bracket Solenoid | 1 |
| 163 | **379547** | Pressure Switch | 1 |
| 164 | **500357-7** | Lockwasher | 2 |
| 165 | **500457-6** | Mounting Screw | 2 |
| 166 | **379303-1** | Solenoid Valve (12 volt) | 1 or |
| | **379303-2** | Solenoid Valve (24 volt) | 1 |
| | **328924-12X** | 12 Volt Speed Limiter w/ E.O.C. | 1 or |
| | **328924-24X** | 24 Volt Speed Limiter w/ E.O.C. | 1 |
| 167 | **328922-12X** | Speed Limiter Control Box (12 volt) | 1 or |
| | **328922-24X** | Speed Limiter Control Box (24 volt) | 1 |
| | **328931X** | Parts Bag, Mounting | 1 |
| 168 | **500357-7** | Lockwasher | 4 |
| 169 | **500376-6** | Hex Nut | 4 |

Continued on next page



Parker Chelsea

**Parker Hannifin Corporation**
Chelsea Products Division
Olive Branch, MS 38654 USA

| Item | Part Number | Description | Quantity |
|---|---|---|---|
| 170 | **500448-9** | Slotted Screw | 4 |
| 171 | **328923-10X** | Speed Switch Connector Cable (10 Ft.) | 1 or |
| | **328923-5X** | Speed Switch Conector Cable (5 Ft.) Optional | 1 |
| 172 | **379244** | Universal Mounting Bracket | 1 |
| N.S. | **379260** | Caution Tag 12 Volt | 1 or |
| N.S. | **379261** | Caution Tag 24 Volt | 1 |
| N.S. | **379266** | E.O.C. Owners Manual 230/231 Series | 1 |
| N.S. | **379318** | E.O.C. Screwdriver | 1 |
| N.S. | **68-P-33-1** | Spanish Control Plate | 1 |
| N.S. | **68-P-33-2** | French Control Plate | 1 |
| 173 | **379265** | Grommet | 1 |
| 174 | **379305** | Pressure Switch | 1 |
| 175 | **379306** | Fork Connector | 4 |
| 176 | **378414** | Pressure Protection Valve | 1 |
| 177 | **379044-7** | Nylon Tubing (35 ft.) | 1 |
| 178 | **379254-13** | #14 Gauge Blue Wire w/ Ring Connector | 1 |
| 179 | **379254-14** | #14 Gauge Black Wire w/ 2 Ring Connectors | 1 |
| 180 | **379254-8** | #14 Gauge Green Wire w/ Fork Connector | 1 |

## Air Shift Installation with Pilot Valve

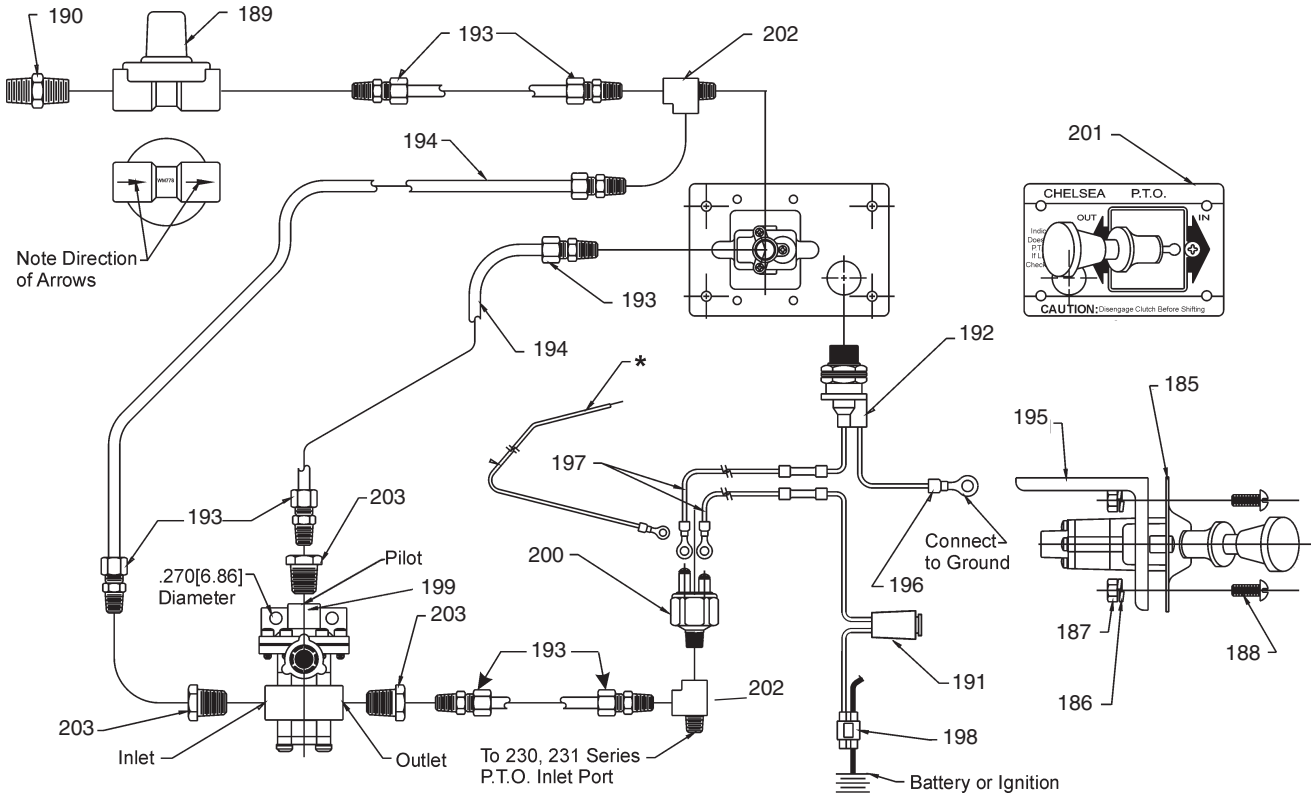


| Item | Part Number | Description | Quantity |
|---|---|---|---|
| | **328388-57X** | **Air Shift Installation Kit (with Pilot Valve)** | 1 |
| 185 | **328863X** | Air Valve 2 Position 2 Way | 1 |
| | **328931X** | Parts Bag, Mounting | 1 |
| 186 | **500357-7** | Lockwasher | 4 |
| 187 | **500376-6** | Hex Nut | 4 |
| 188 | **500448-9** | Slotted Screw | 4 |
| 189 | **378414** | Pressure Protection Valve | 1 |
| 190 | **378416** | Hex Nipple | 1 |
| 191 | **379900** | Fuse Holder (10 amp) | 1 |
| 192 | **378978** | Indicator Light | 1 |
| 193 | **379042** | Male Connector | 8 |
| 194 | **379044-7** | Nylon Tubing (35 ft.) | 1 |
| 195 | **379130** | Support Bracket | 2 |
| 196 | **379253** | Ring Connector | 1 |
| 197 | **379254-15** | Ring Wire & Butt Connector | 2 |
| 198 | **379257** | Splice Connector | 1 |
| 199 | **379497** | Relay Valve | 1 |
| 200 | **379547** | Pressure Switch | 1 |
| N.S. | **329218X** | Indicator Switch Kit | 1 |
| N.S. | **SK-286** | Indicator Light Installation Sketch | 1 |
| N.S. | **379640** | Booted Connector | 1 |
| 201 | **68-P-27** | Name Plate | 1 |
| 202 | **500750-1** | Street Tee | 2 |
| 203 | **379131-1** | Reducer | 3 |
| * | **329336-3X** | Allison 1000, 2000/2400 Series Wire Kit | 1 |
| | **379254-13** | Wire w/Ring Connector (Allison 1000, 2000/2400 Series) | 1 |

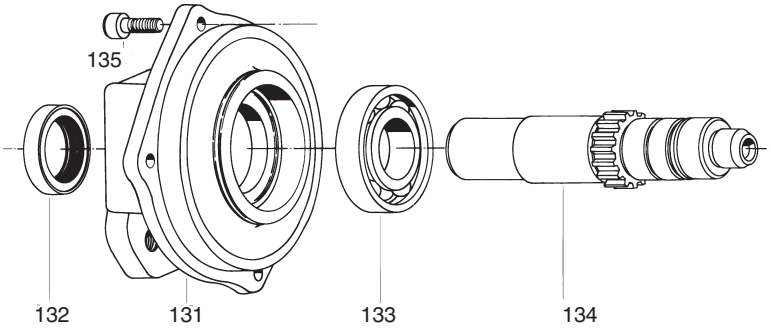


| Pump Mounting Suffix (See Note) | Flange Item 131 | Bearing Cap Gasket | Seal Item 132 | Bearing Item 133 | Driveshaft & Clutch Assembly Number | Driveshaft & Clutch Output Shaft Item 134 ** | Output Shaft Spacer | Hex Socket Head Screw Item 135 |
|---|---|---|---|---|---|---|---|---|
| BA Assembly 3 & 5 | 21-P-451 | 22-P-53 (2) | 28-P-225 | 550010 | 328926-13X | 3-P-970 | | 378430-12 |
| BD Assembly 3 & 5 | 21-P-451 | 22-P-53 (2) | 28-P-225 | 550010 | 328926-13X | 3-P-970 | | 378430-12 |
| XE Assembly 3 & 5 | 21-P-568 | 22-P-53 (2) | 28-P-225 | 550010 | 328926-12X | 3-P-964 | 4-P-183 | 378447-7 |
| XK Assembly 3 & 5 | 21-P-445 | 22-P-53 (2) | 28-P-225 | 550010 | 328926-4X | 3-P-686 | | 378447-7 |
| Assembly 4 & 6 | 21-P-303 | 22-P-53 (2) | 28-P-225 | 550010 | 328926-3X | 3-P-678 | | 378447-6 |
| XP Assembly 3 & 5 | 21-P-443 | 22-P-53 (2) | 28-P-225 | 550010 | 328926-4X | 3-P-686 | | 378447-7 |
| Assembly 4 & 6 | 21-P-301 | 22-P-53 (2) | 28-P-225 | 550010 | 328926-3X | 3-P-678 | | 378447-6 |
| XR Assembly 3 & 5 (Only)* | 21-P-447 | 22-P-53 (2) | 28-P-225 | 550010 | 328926-5X | 3-P-703 | | 378447-7 |
| XX Assembly 3 & 5 | 21-P-297 | 22-P-53 (2) | 28-P-225 | 550010 | 328926-6X | 3-P-787 | | 378430-12 |
| Assembly 4 & 6 | 21-P-297 | 22-P-53 (2) | 28-P-225 | 550010 | 328926-7X | 3-P-788 | | 378430-10 |
| XY Assembly 3 & 5 | 21-P-468 | 22-P-53 (2) | 28-P-230 | 550010 | 328926-8X | 3-P-825 | | 378447-7 |
| AF Assembly 3 & 5 | 21-P-445 | 22-P-53 (2) | 28-P-225 | 550010 | 328926-9X | 3-P-896 | | 378447-7 |
| Assembly 4 & 6 | 21-P-303 | 22-P-53 (2) | 28-P-225 | 550010 | 328926-10X | 3-P-895 | | 378447-6 |
| RA Assembly 3 & 5 | 21-P-628 | 22-P-53 (2) | 28-P-225 | 550010 | 328926-5X | 3-P-703 | | 378447-6 |
| RB Assembly 3 & 5 | 21-P-572 | 22-P-53 (2) | 28-P-225 | 550010 | 328926-5X | 3-P-703 | | 378447-6 |
| RF Assembly 3 & 5 | 21-P-628 | 22-P-53 (2) | 28-P-225 | 550010 | 328926-11X | 3-P-957 | | 378447-7 |

The Rotatable Flanges attach to the 21-P-447 Flange
* - 328748X Pump to Flange Mounting Kit Must Be Used with “R” Suffix
Kit Contains: (4) 378430-11 Hex Head Capscrews (.3125" - 18 x 1.125")
(4) 378919 Washers (Special)
(4) 45-P-11 Bushing Guide
**- Assembly Includes the Pump Shaft Shown Plus Items 19 thru 29 on page 3



**Parker Hannifin Corporation**
Chelsea Products Division
Olive Branch, MS 38654 USA

# Pump Flange Conv. Kits Bills of Materials

| Conversion Kit Number | | Ass'y | Flange Type | Shaft Type |
|---|---|---|---|---|
| 329043-9X | XD to BD | 3 & 5 | Shaft Brake | 1.25" Round w/key |
| 329043-19X | XD to BA | 3 & 5 | Shaft Brake | 1.25" Round w/key |
| 329160-11X | XD to XK | 3 & 5 | S.A.E. “B” 2 or 4 Bolt Flange | S.A.E. “B” .875" 13 - Tooth |
| 329160-12X | XD to XP | 3 & 5 | S.A.E. “A” 2 Bolt (4.188 BC) w/ S.A.E. “B” 4 Bolt (5.0" BC) | S.A.E. “B” .875" 13 - Tooth |
| 329160-13X | XD to XR | 3 & 5 | For Parker P16 “S” Flange Pumps | S.A.E. “B” .875" 13 - Tooth |
| 329160-14X | XD to XY | 3 & 5 | DIN 5462 | DIN 5462 |
| 329160-15X | XD to XK | 4 & 6 | S.A.E. “B” 2 or 4 Bolt Flange | S.A.E. “B” .875" 13 - Tooth |
| 329160-16X | XD to XP | 4 & 6 | S.A.E. “A” 2 Bolt (4.188 BC) w/ S.A.E. “B” 4 Bolt (5.0" BC) | S.A.E. “B” .875" 13 - Tooth |
| 329160-33X | XD to RA | 3 & 5 | S.A.E. “B” 2 Bolt Rotatable Flange | S.A.E. “B” .875" 13 - Tooth |
| 329160-34X | XD to RB | 3 & 5 | S.A.E. “B” 4 Bolt Rotatable Flange | S.A.E. “B” .875" 13 - Tooth |
| 329160-35X | XR to RA | 3 & 5 | S.A.E. “B” 2 Bolt Rotatable Flange | S.A.E. “B” .875" 13 - Tooth |
| 329160-36X | XR to RB | 3 & 5 | S.A.E. “B” 4 Bolt Rotatable Flange | S.A.E. “B” .875" 13 - Tooth |
| 329160-43X | XD to XX | All | DIN 100 | Round Tapered w/ key |
| 329160-46X | XD to RF | 3 & 5 | S.A.E. “B” 2 Bolt Rotatable Flange | S.A.E. “BB” 1.0" 15 - Tooth |
| 329160-50X | XD to AF | 3 & 5 | S.A.E. “B” 2 or 4 Bolt Flange | S.A.E. “BB” 1.0" 15 - Tooth |
| 329160-51X | XD to AF | 4 & 6 | S.A.E. “B” 2 or 4 Bolt Flange | S.A.E. “BB” 1.0" 15 - Tooth |
| 329160-55X | XD to XE | 3 & 5 | S.A.E. “A” Pilot 2 Bolt | S.A.E. .625" 9 - Tooth |

## Bills of Material for Pump Flange Conversion Kits

| Part Number | Description | Quantity |
|---|---|---|
| **329043-19X** | **Conversion Kit (XD to BA) 3 & 5 Assembly** | |
| **378576** | Snap Ring | 2 |
| **379977** | Pin | 1 |
| **550010** | Bearing, Roller | 1 |
| **22-P-53** | Bearing Cap Gasket | 2 |
| **28-P-225** | Oil Seal | 1 |
| **28-P-244** | O-Ring | 4 |
| **31-P-113** | Washer, Spacer | 1 |
| **328807-3X** | Bearing Cap Assembly | 1 |
| **329410X** | Brake Assembly | 1 |
| **37-P-60** | Spring | 1 |
| **3-P-970** | Pump Shaft | 1 |
| **500007-29** | Woodruff Key | 1 |
| **379746** | Snap Ring | 1 |
| **35-P-9-1** | Gasket | 2 |
| **35-P-9-2** | Gasket | 2 |
| **329043-9X** | **Conversion Kit (XD to BD)** | |
| **378576** | Snap Ring | 2 |
| **379977** | Pin | 1 |
| **550010** | Bearing, Roller | 1 |
| **22-P-53** | Bearing Cap Gasket | 2 |
| **28-P-225** | Oil Seal | 1 |
| **28-P-244** | O-Ring | 4 |
| **31-P-113** | Washer, Spacer | 1 |
| **328807-3X** | Bearing Cap Assembly | 1 |
| **329410X** | Brake Assembly | 1 |
| **37-P-24** | Spring | 1 |
| **3-P-970** | Pump Shaft | 1 |
| **500007-29** | Woodruff Key | 1 |
| **379746** | Snap Ring | 1 |
| **35-P-9-1** | Gasket | 2 |
| **35-P-9-2** | Gasket | 2 |
| **329160-11X** | **Conversion Kit (XD to XK)** | |
| **378576** | Snap Ring | 1 |
| **378849** | Retainer Ring | 1 |
| **379688** | Grease Packet | 1 |
| **379746** | Lock Ring | 1 |
| **21-P-445** | Bearing Cap | 1 |
| **22-P-53** | Bearing Cap Gasket | 2 |


Parker Chelsea
**Parker Hannifin Corporation**
Chelsea Products Division
Olive Branch, MS 38654 USA

## Pump Flange Conv. Kits Bills of Materials

| Part Number | Description | Quantity |
|---|---|---|
| 28-P-178 | O-Ring | 1 |
| 28-P-179 | Oil Seal | 1 |
| 28-P-225 | Oil Seal | 1 |
| 28-P-244 | O-Ring | 2 |
| 378447-7 | Socket Head Capscrew (.312" - 18 x 1.250") | 4 |
| 3-P-686 | Pump Shaft | 1 |
| **329160-12X** | **Conversion Kit (XD to XP)** | |
| 378576 | Snap Ring | 1 |
| 378849 | Retainer Ring | 1 |
| 379688 | Grease Packet | 1 |
| 379746 | Lock Ring | 1 |
| 21-P-443 | Bearing Cap | 1 |
| 22-P-53 | Bearing Cap Gasket | 2 |
| 28-P-178 | O-Ring | 1 |
| 28-P-179 | Oil Seal | 1 |
| 28-P-225 | Oil Seal | 1 |
| 28-P-244 | O-Ring | 2 |
| 378447-7 | Socket Head Capscrew (.312" - 18 x 1.250") | 4 |
| 3-P-686 | Pump Shaft | 1 |
| **329160-13X** | **Conversion Kit (XD to XR)** | |
| 378576 | Snap Ring | 1 |
| 378849 | Retainer Ring | 1 |
| 379688 | Grease Packet | 1 |
| 379746 | Lock Ring | 1 |
| 21-P-447 | Bearing Cap | 1 |
| 22-P-53 | Bearing Cap Gasket | 2 |
| 28-P-178 | O-Ring | 1 |
| 28-P-179 | Oil Seal | 1 |
| 28-P-225 | Oil Seal | 1 |
| 28-P-244 | O-Ring | 2 |
| 378447-7 | Socket Head Capscrew (.312" - 18 x 1.250") | 4 |
| 3-P-703 | Pump Shaft | 1 |
| **329160-14X** | **Conversion Kit (XD to XY)** | |
| 378576 | Snap Ring | 1 |
| 378849 | Retainer Ring | 1 |
| 378898 | Flat Head Socket Capscrew (.438" - 14 x 1.000") | 1 |
| 379335 | Coupling, Splined | 1 |
| 379688 | Grease Packet | 1 |
| 379746 | Lock Ring | 1 |
| 21-P-468 | Bearing Cap | 1 |
| 22-P-53 | Bearing Cap Gasket | 2 |
| 28-P-178 | O-Ring | 1 |
| 28-P-179 | Oil Seal | 1 |
| 28-P-230 | Oil Seal | 1 |
| 28-P-244 | O-Ring | 2 |
| 378447-7 | Socket Head Capscrew (.312" - 18 x 1.250") | 4 |
| 3-P-825 | Pump Shaft | 1 |
| **329160-15X** | **Conversion Kit (XD to XK)** | |
| 378576 | Snap Ring | 1 |
| 378849 | Retainer Ring | 1 |
| 379688 | Grease Packet | 1 |
| 379746 | Lock Ring | 1 |
| 21-P-303 | Bearing Cap | 1 |
| 22-P-53 | Bearing Cap Gasket | 2 |
| 28-P-178 | O-Ring | 1 |
| 28-P-179 | Oil Seal | 1 |
| 28-P-225 | Oil Seal | 1 |
| 28-P-244 | O-Ring | 2 |
| 378447-6 | Socket Head Capscrew (.312" - 18 x 1.000") | 4 |
| 3-P-678 | Pump Shaft | 1 |

| Part Number | Description | Quantity |
|---|---|---|
| **329160-16X** | **Conversion Kit (XD to XP)** | |
| **378576** | Snap Ring | 1 |
| **378849** | Retainer Ring | 1 |
| **379688** | Grease Packet | 1 |
| **379746** | Lock Ring | 1 |
| **21-P-301** | Bearing Cap | 1 |
| **22-P-53** | Bearing Cap Gasket | 2 |
| **28-P-178** | O-Ring | 1 |
| **28-P-179** | Oil Seal | 1 |
| **28-P-225** | Oil Seal | 1 |
| **28-P-244** | O-Ring | 2 |
| **378447-6** | Socket Head Capscrew (.312" - 18 x 1.000") | 4 |
| **3-P-678** | Pump Shaft | 1 |
| **329160-33X** | **Conversion Kit (XD to RA)** | |
| **378576** | Snap Ring | 1 |
| **378849** | Retainer Ring | 1 |
| **379688** | Grease Packet | 1 |
| **379746** | Lock Ring | 1 |
| **21-P-447** | Bearing Cap | 1 |
| **21-P-628** | Pump Flange | 1 |
| **22-P-53** | Bearing Cap Gasket | 2 |
| **28-P-178** | O-Ring | 1 |
| **28-P-179** | Oil Seal | 1 |
| **28-P-225** | Oil Seal | 1 |
| **28-P-244** | O-Ring | 2 |
| **378447-6** | Socket Head Capscrew (.312" - 18 x 1.000") | 4 |
| **378447-7** | Socket Head Capscrew (.312" - 18 x 1.250") | 4 |
| **3-P-703** | Pump Shaft | 1 |
| **329160-34X** | **Conversion Kit (XD to RB)** | |
| **378576** | Snap Ring | 1 |
| **378849** | Retainer Ring | 1 |
| **379688** | Grease Packet | 1 |
| **379746** | Lock Ring | 1 |
| **21-P-447** | Bearing Cap | 1 |
| **21-P-572** | Pump Flange | 1 |
| **22-P-53** | Bearing Cap Gasket | 2 |
| **28-P-178** | O-Ring | 1 |
| **28-P-179** | Oil Seal | 1 |
| **28-P-225** | Oil Seal | 1 |
| **28-P-244** | O-Ring | 2 |
| **378447-6** | Socket Head Capscrew (.312" - 18 x 1.000") | 4 |
| **378447-7** | Socket Head Capscrew (.312" - 18 x 1.250") | 4 |
| **3-P-703** | Pump Shaft | 1 |
| **329160-35X** | **Conversion Kit (XR to RA)** | |
| **21-P-628** | Pump Flange | 1 |
| **378447-6** | Socket Head Capscrew (.312" - 18 x 1.000") | 4 |
| **329160-36X** | **Conversion Kit (XR to RB)** | |
| **21-P-572** | Pump Flange | 1 |
| **378447-6** | Socket Head Capscrew (.312" - 18 x 1.000") | 4 |
| **329160-43X** | **Conversion Kit (XD to XX)** | |
| **378576** | Snap Ring | 1 |
| **378849** | Retainer Ring | 1 |
| **379111** | Square Key | 1 |
| **379746** | Lock Ring | 1 |
| **501181** | Hex Nut | 1 |
| **22-P-53** | Bearing Cap Gasket | 2 |
| **28-P-178** | O-Ring | 1 |
| **28-P-179** | Oil Seal | 1 |
| **28-P-225** | Oil Seal | 1 |


Parker Chelsea
**Parker Hannifin Corporation**
Chelsea Products Division
Olive Branch, MS 38654 USA

## Pump Flange Conv. Kits Bills of Materials

| Part Number | Description | Quantity |
|---|---|---|
| 28-P-244 | O-Ring | 2 |
| 378430-10 | Hex Capscrew (.312" - 18 x 1.000") | 4 |
| 378430-12 | Hex Capscrew (.312" - 18 x 1.250") | 4 |
| 3-P-787 | Pump Shaft | 1 |
| 3-1-604 | Companion Flange (Sold Separately) | 1 |
| **329160-46X** | **Conversion Kit (XD to RF)** | |
| 378576 | Snap Ring | 1 |
| 378849 | Retainer Ring | 1 |
| 379688 | Grease Packet | 1 |
| 379746 | Lock Ring | 1 |
| 21-P-447 | Bearing Cap | 1 |
| 21-P-628 | Pump Flange | 1 |
| 22-P-53 | Bearing Cap Gasket | 2 |
| 28-P-178 | O-Ring | 1 |
| 28-P-179 | Oil Seal | 1 |
| 28-P-225 | Oil Seal | 1 |
| 28-P-244 | O-Ring | 2 |
| 378447-6 | Socket Head Capscrew (.312" - 18 x 1.000") | 4 |
| 378447-7 | Socket Head Capscrew (.312" - 18 x 1.250") | 4 |
| 3-P-957 | Pump Shaft | 1 |
| **329160-50X** | **Conversion Kit (XD to AF)** | |
| 378576 | Snap Ring | 1 |
| 378849 | Retainer Ring | 1 |
| 379688 | Grease Packet | 1 |
| 379746 | Lock Ring | 1 |
| 21-P-445 | Bearing Cap | 1 |
| 22-P-53 | Bearing Cap Gasket | 2 |
| 28-P-178 | O-Ring | 1 |
| 28-P-179 | Oil Seal | 1 |
| 28-P-225 | Oil Seal | 1 |
| 28-P-244 | O-Ring | 2 |
| 378447-7 | Socket Head Capscrew (.312" - 18 x 1.250") | 4 |
| 3-P-896 | Pump Shaft | 1 |
| **329160-51X** | **Conversion Kit (XD to AF)** | |
| 378576 | Snap Ring | 1 |
| 378849 | Retainer Ring | 1 |
| 379688 | Grease Packet | 1 |
| 379746 | Lock Ring | 1 |
| 21-P-303 | Pump Flange | 1 |
| 22-P-53 | Bearing Cap Gasket | 2 |
| 28-P-178 | O-Ring | 1 |
| 28-P-179 | Oil Seal | 1 |
| 28-P-224 | Oil Seal | 2 |
| 28-P-225 | Oil Seal | 1 |
| 378447-6 | Socket Head Capscrew (.312" - 18 x 1.000") | 4 |
| 3-P-895 | Pump Shaft | 1 |
| **329160-55X** | **Conversion Kit (XD to XE)** | |
| 378576 | Snap Ring | 1 |
| 379688 | Grease Packet | 1 |
| 379746 | Lock Ring | 1 |
| 21-P-568 | Bearing Cap | 1 |
| 22-P-53 | Bearing Cap Gasket | 2 |
| 28-P-178 | O-Ring | 1 |
| 28-P-179 | Oil Seal | 1 |
| 28-P-225 | Oil Seal | 1 |
| 28-P-244 | O-Ring | 2 |
| 378447-7 | Socket Head Capscrew (.312" - 18 x 1.250") | 4 |
| 3-P-964 | Pump Shaft | 1 |
| 4-P-183 | Spacer | 1 |

# Offer of Sale

The items described in this document and other documents or descriptions provided by Parker Hannifin Corporation, its subsidiaries and its authorized distributors are hereby offered for sale at prices to be established by Parker Hannifin Corporation, its subsidiaries and its authorized distributors. This offer and its acceptance by any customer ("Buyer") shall be governed by all of the following Terms and Conditions. Buyer's order for any such items, when communicated to Parker Hannifin Corporation, its subsidiary or an authorized distributor ("Seller") verbally or in writing, shall constitute acceptance of this offer.

**1. Terms and Conditions of Sale:** All descriptions, quotations, proposals, offers, acknowledgments, acceptances and sales of Seller's products are subject to and shall be governed exclusively by the terms and conditions stated herein. Buyer's acceptance of any offer to sell is limited to these terms and conditions. Any terms or conditions in addition to, or inconsistent with those stated herein, proposed by Buyer in any acceptance of an offer by Seller, are hereby objected to. No such additional, different or inconsistent terms and conditions shall become part of the contract between Buyer and Seller unless expressly accepted in writing by Seller. Seller's acceptance of any offer to purchase by Buyer is expressly conditional upon Buyer's assent to all the terms and conditions stated herein, including any terms in addition to, or inconsistent with those contained in Buyer's offer, Acceptance of Seller's products shall in all events constitute such assent.

**2. Payment:** Payment shall be made by Buyer net 30 days from the date of delivery of the items purchased hereunder. Amounts not timely paid shall bear interest at the maximum rate permitted by law for each month or portion thereof that the Buyer is late in making payment. Any claims by Buyer for omissions or shortages in a shipment shall be waived unless Seller receives notice thereof within 30 days after Buyer's receipt of the shipment.

**3. Delivery:** Unless otherwise provided on the face hereof, delivery shall be made F.O.B. Seller's plant. Regardless of the method of delivery, however, risk of loss shall pass to Buyer upon Seller's delivery to a carrier. Any delivery dates shown are approximate only and Seller shall have no liability for any delays in delivery.

**4. Warranty:** Seller warrants that the items sold hereunder shall be free from defects in material or workmanship for a period of:

(A) All Power Take-Off units 18 months from date of sale.

(B) Except 267, 269, 277, 278, 246, 247, 250, and 859 series two (2) years from date of installation. **THIS WARRANTY COMPRISES THE SOLE AND ENTIRE WARRANTY PERTAINING TO ITEMS PROVIDED HEREUNDER. SELLER MAKES NO OTHER WARRANTY, GUARANTEE, OR REPRESENTATION OF ANY KIND WHATSOEVER. ALL OTHER WARRANTIES, INCLUDING BUT NOT LIMITED TO, MERCHANTABILITY AND FITNESS FOR PURPOSE, WHETHER EXPRESS, IMPLIED, OR ARISING BY OPERATION OF LAW, TRADE USAGE, OR COURSE OF DEALING ARE HEREBY DISCLAIMED. NOTWITHSTANDING THE FOREGOING, THERE ARE NO WARRANTIES WHATSOEVER ON ITEMS BUILT OR ACQUIRED WHOLLY OR PARTIALLY, TO BUYER'S DESIGNS OR SPECIFICATIONS.**

**5. Limitation Of Remedy: SELLER'S LIABILITY ARISING FROM OR IN ANY WAY CONNECTED WITH THE ITEMS SOLD OR THIS CONTRACT SHALL BE LIMITED EXCLUSIVELY TO REPAIR OR REPLACEMENT OF THE ITEMS SOLD OR REFUND OF THE PURCHASE PRICE PAID BY BUYER, AT SELLER'S SOLE OPTION. IN NO EVENT SHALL SELLER BE LIABLE FOR ANY INCIDENTAL, CONSEQUENTIAL OR SPECIAL DAMAGES OF ANY KIND OR NATURE WHATSOEVER, INCLUDING BUT NOT LIMITED TO LOST PROFITS ARISING FROM OR IN ANY WAY CONNECTED WITH THIS AGREEMENT OR ITEMS SOLD HEREUNDER, WHETHER ALLEGED TO ARISE FROM BREACH OF CONTRACT, EXPRESS OR IMPLIED WARRANTY, OR IN TORT, INCLUDING WITHOUT LIMITATION, NEGLIGENCE, FAILURE TO WARN OR STRICT LIABILITY.**

**6. Changes, Reschedules and Cancellations:** Buyer may request to modify the designs or specifications for the items sold hereunder as well as the quantities and delivery dates thereof, or may request to cancel all or part of this order, however, no such requested modification or cancellation shall become part of the contract between Buyer and Seller unless accepted by Seller in a written amendment to this Agreement. Acceptance of any such requested modification or cancellation shall be at Seller's discretion, and shall be upon such terms and conditions as Seller may require.

**7. Special Tooling:** A tooling charge may be imposed for any special tooling, including without limitation, dies, fixtures, molds and patterns, acquired to manufacture items sold pursuant to this contract. Such special tooling shall be and remain Seller's property notwithstanding payment of any charges by Buyer. In no event will Buyer acquire any interest in apparatus belonging to Seller which is utilized in the manufacture of the items sold hereunder, even if such apparatus has been specially converted or adapted for such manufacture and notwithstanding any charges paid by Buyer. Unless otherwise agreed, Seller shall have the right to alter, discard or otherwise dispose of any special tooling or other property in its sole discretion at any time.

**8. Buyer's Property:** Any designs, tools, patterns, materials, drawings, confidential information or equipment furnished by Buyer or any other items which become Buyer's property, may be considered obsolete and may be destroyed by Seller after two (2) consecutive years have elapsed without Buyer placing an order for the items which are manufactured using such property, Seller shall not be responsible for any loss or damage to such property while it is in Seller's possession or control.

**9. Taxes:** Unless otherwise indicated on the face hereof, all prices and charges are exclusive of excise, sales, use, property, occupational or like taxes which may be imposed by any taxing authority upon the manufacture, sale or delivery of the items sold hereunder. If any such taxes must be paid by Seller or if Seller is liable for the collection of such tax, the amount thereof shall be in addition to the amounts for the items sold. Buyer agrees to pay all such taxes or to reimburse Seller therefore upon receipt of its invoice. If Buyer claims exemption from any sales, use or other tax imposed by any taxing authority, Buyer shall save Seller harmless from and against any such tax, together with any interest or penalties thereon which may be assessed if the items are held to be taxable.

**10. Indemnity For Infringement of Intellectual Property Rights:** Seller shall have no liability for infringement of any patents, trademarks, copyrights, trade dress, trade secrets or similar rights except as provided in this Part 10. Seller will defend and indemnify Buyer against allegations of infringement of U.S. Patents, U.S. Trademarks, copyrights, trade dress and trade secrets (hereinafter 'Intellectual Property Rights'). Seller will defend at its expense and will pay the cost of any settlement or damages awarded in an action brought against Buyer based on an allegation that an item sold pursuant to this contract infringes the Intellectual Property Rights of a third party. Seller's obligation to defend and indemnify Buyer is contingent on Buyer notifying Seller within ten (10) days after Buyer becomes aware of such allegations of infringement, and Seller having sole control over the defense of any allegations or actions including all negotiations for settlement or compromise. If an item sold hereunder is subject to a claim that it infringes the Intellectual Property Rights of a third party, Seller may, at its sole expense and option, procure for Buyer the right to continue using said item, replace or modify said item so as to make it noninfringing, or offer to accept return of said item and return the purchase price less a reasonable allowance for depreciation. Notwithstanding the foregoing, Seller shall have no liability for claims of infringement based on information provided by Buyer, or directed to items delivered hereunder for which the designs are specified in whole or part by Buyer, or infringements resulting from the modification, combination or use in a system of any item sold hereunder. The foregoing provisions of this Part 10 shall constitute Seller's sole and exclusive liability and Buyer's sole and exclusive remedy for infringement of Intellectual Property Rights.

If a claim is based on information provided by Buyer or if the design for an item delivered hereunder is specified in whole or in part by Buyer, Buyer shall defend and indemnify Seller for all costs, expenses or judgments resulting from any claim that such item infringes any patent, trademark, copyright, trade dress, trade secret or any similar right.

**11. Force Majeure:** Seller does not assume the risk of and shall not be liable for delay or failure to perform any of Seller's obligations by reason of circumstances beyond the reasonable control of Seller (hereinafter 'Events of Force Majeure'). Events of Force Majeure shall include without limitation, accidents, acts of God, strikes or labor disputes, acts, laws, rules or regulations of any government or government agency, fires, floods, delays or failures in delivery of carriers or suppliers, shortages of materials and any other cause beyond Seller's control.

**12. Entire Agreement/Governing Law:** The terms and conditions set forth herein, together with any amendments, modifications and any different terms or conditions expressly accepted by Seller in writing, shall constitute the entire Agreement concerning the items sold, and there are no oral or other representations or agreements which pertain there/to. This Agreement shall be governed in all respects by the law of the State of Ohio. No actions arising out of the sale of the items sold hereunder or this Agreement may be brought by either party more than two (2) years after the cause of action accrues.

6/08-P



Parker Chelsea

**Parker Hannifin Corporation**
Chelsea Products Division
Olive Branch, MS 38654 USA

**Parker Hannifin Corporation**
Chelsea Products Division
8225 Hacks Cross Road
Olive Branch, Mississippi 38654 USA
Tel: (662) 895-1011
Fax: (662) 890-5379
www.parker.com/chelsea

TGI 01/09